Fuengirola Cadet European Cup 2023

Fuengirola (ESP), 18-19 Feb 2023

Event Report

448 competitors from 19 nations

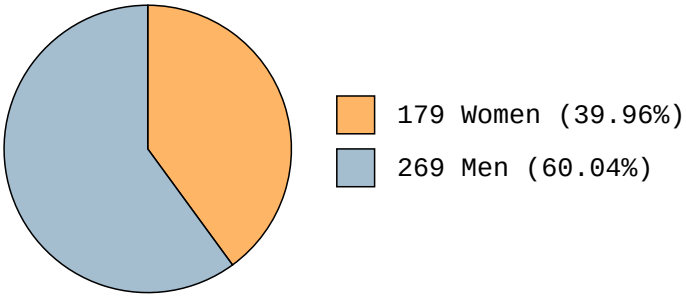

-50 kg	-55 kg	-60 kg	-66 kg	-73 kg	-81 kg	-90 kg	+90 kg	m
25	39	57	39	37	36	20	16	**269**

-40 kg	-44 kg	-48 kg	-52 kg	-57 kg	-63 kg	-70 kg	+70 kg	w
5	18	23	34	29	34	22	14	**179**

Continent	AJU	EJU	JUA	OJU	PJC	Total
Nations		15	2		2	**19**
Competitors		428	12		8	**448**

Schedule	day 1	day 2
Date	18 Feb	19 Feb
Start	9:00	9:00
Finals		

ippon.org v3.0 (c) International Judo Federation IJF

Fuengirola Cadet European Cup 2023

Fuengirola (ESP), 18-19 Feb 2023

Men

Final Results

-50 kg

1.	LEBRETON, Pierre	FRA
2.	CHOIJILJAV, Tuguldur	MGL
3.	CHATTI, Amza	FRA
3.	SAAKYAN, Alexandre	FRA
5.	MARTIN TORRES, Carlos	ESP
5.	SASSI, Thomas	ITA
7.	LUCAS, Titouan	FRA
7.	TANNIAN, Luke	GBR

-55 kg

1.	MIVOVAN, Adrian	FRA
2.	TALON, Tiago	FRA
3.	BOVO, Ethan	FRA
3.	CHRANIUK, Jesse	GBR
5.	BRENIER, Tom	FRA
5.	ZORRETA, Manuel	POR
7.	PELLIZZARO, Mattia	ITA
7.	RICHARDSON, Luca	NED

-60 kg

1.	GUETTARI, Kais	FRA
2.	ADRIANO, Maxence	FRA
3.	GBINGBEHI, Johan	FRA
3.	SAGASTEGUI, Eduardo	MEX
5.	BARTHELEMY CHAUVEL, Gabin	FRA
5.	UTRERO CRESPO, Iker	ESP
7.	COSTA, Carlos	POR
7.	MIRANDA GALINDO, Eduardo	ESP

-66 kg

1.	GOGINASHVILI, Irakli	GBR
2.	PARRILLA MUNOZ, Daniel	ESP
3.	NZE BEKALE, Kylian	FRA
3.	QUEREDA YURICE, Hugo	ESP
5.	CARAZO LACUNZA, Julio	ESP
5.	JANEIRO, Rodrigo	POR
7.	CHAMBERS-EDUTIE, Kyras	GBR
7.	INFANZON OCAMPO, Carlos	ESP

-73 kg

1.	TAVOLETTA, Lucio	ITA
2.	MARCZAK, Derek	GBR
3.	BELLEVAL, Jawanys	FRA
3.	KACZOREK, Mikolaj	POL
5.	BADRAKH, Shinetulga	MGL
5.	KRAJCAR, Paolo	CRO
7.	DIKAJEV, Saad	EST
7.	MOLINARO, Giulio	ITA

-81 kg

1.	DURBANO, Alessandro Bruno	ITA
2.	COPAT, Leonardo	ITA
3.	HUKKANEN, Aleksi	FIN
3.	SARBOCH, Vit	CZE
5.	COUTINHO, Tiago	POR
5.	JAKS, Adam	CZE
7.	GNAFOUA, David	FRA
7.	ZALAGH, Redouane	FRA

-90 kg

1.	MINCINESI, Cristiano	ITA
2.	LOZANO PASTOR, Guillem	ESP
3.	RAMIREZ PEREZ, Antonio Aixel	ESP
3.	SONNTAG, Gaya	FRA
5.	KOTCHE, Daniel	FRA
5.	NWAHA NGON, Avi Kelian	FRA
7.	BLACK, Noah	GBR
7.	KANDELAKI, David	FRA

+90 kg

1.	AKIANA MONGO, Matheo	FRA
2.	TURKHUU, Edouard	FRA
3.	DA COSTA, Jean Pascal Bi Goly	FRA
3.	MASAK, Marek-Adrian	EST
5.	MARTIN ROBLEDO, Iker	ESP
5.	ROJAS ARENCIBIA, Alejandro Antonio	ESP
7.	BOUCHARD, Jean David	CAN
7.	GRACIA CONCHA, Guillermo	ESP

ippon.org v3.0 (c) International Judo Federation IJF

Fuengirola Cadet European Cup 2023

Fuengirola (ESP), 18-19 Feb 2023

Women

Final Results

-40 kg

1.	MARTIN CARRICHES, Aiora	ESP
2.	AUREL, Mathilde	FRA
3.	SERRANO GEMES, Estela	ESP
3.		
5.		
5.		
7.		
7.		

-44 kg

1.	BEORLEGUI OSES, Marta	ESP
2.	LOPEZ, Alice	FRA
3.	GARCIA SANCHEZ, Irene	ESP
3.	PUENTE LOPEZ, Africa	ESP
5.	LAHRIFI, Lalla-Dounia	FRA
5.	RIKMANSPOEL, Maud	NED
7.	EWING, Eva	GBR
7.	VONDRAKOVA, Lada	CZE

-48 kg

1.	DIAZ HERNANDEZ, Aitana	ESP
2.	BERSELLINI, Alice	ITA
3.	AYMARD, Tifenn	FRA
3.	MAILLARD, Celia	FRA
5.	PLA BELMONTE, Claudia	ESP
5.	STOFBERG, Lara	NED
7.	BONZANO, Giulia	ITA
7.	DYE, Isciane	FRA

-52 kg

1.	TERBISH, Ariunzaya	MGL
2.	COUDRET, Mathilde	FRA
3.	ARCONES MONTENEGRO, Maria Del Rocio	ESP
3.	POULANGE, Alyssia	FRA
5.	COMEYNE, Manon	FRA
5.	RIVERO SUAREZ, Daniela	ESP
7.	AGATI-ALOUACHE, Manon	FRA
7.	SCHIPPER, Yael	NED

-57 kg

1.	SILVEIRA, Maria	POR
2.	LINK, Chloe	GBR
3.	NICOLAS, Ielena	FRA
3.	SKERYTE, Ugne	LTU
5.	MYLLYLA, Riina	FIN
5.	SINNEMA, Fleur	NED
7.	GAMBARDELLA, Nina	ITA
7.	PAZOS TRILLO, Lucia	ESP

-63 kg

1.	CARPIO FERNANDEZ, Lucia	ESP
2.	JEAN, Chloe	FRA
3.	ASTIER, Ema	FRA
3.	CHIPAN, Jaelynn	FRA
5.	KUCHAR, Varvara	LTU
5.	SIMUNKOVA, Adela	CZE
7.	AUBERT GOMEZ, Maya	GBR
7.	POATY, Beyhane	FRA

-70 kg

1.	MUTEBA, Nina	FRA
2.	MARCZAK, Julia	GBR
3.	MENGIA, Aurora	ITA
3.	NLEMBE, Lou Cecile	FRA
5.	DIAS, Patricia	POR
5.	VAN LIJF, Xanne	NED
7.	JACOBS, Kiki	NED
7.	ROSA, Beatriz	POR

+70 kg

1.	MINKADA-CAQUINEAU, Leonie	FRA
2.	DIANKOLELA-BINIAKOUNOU, Quessia	FRA
3.	KOSNAROVA, Marie	CZE
3.	MANE, Rosa	POR
5.	AKTAS, Emma-Melis	EST
5.	HANHELA, Laura	FIN
7.	POGOSYAN, Gayane	EST
7.	SALA CANO, Aitana	ESP

ippon.org v3.0 (c) International Judo Federation IJF

Fuengirola Cadet European Cup 2023

Fuengirola (ESP), 18-19 Feb 2023

Medals

Total

			1st place	2nd place	3rd place	5th place	7th place
1.	**FRA**	France	**6**	**8**	**15**	6	7
2.	**ESP**	Spain	**4**	**2**	**6**	7	5
3.	**ITA**	Italy	**3**	**2**	**1**	1	4
4.	**GBR**	Great Britain	**1**	**3**	**1**	0	5
5.	**MGL**	Mongolia	**1**	**1**	**0**	1	0
6.	**POR**	Portugal	**1**	**0**	**1**	4	2
7.	**CZE**	Czech Republic			**2**	2	1
8.	**FIN**	Finland			**1**	2	0
9.	**EST**	Estonia			**1**	1	2
10.	**LTU**	Lithuania			**1**	1	0
11.	**MEX**	Mexico			**1**	0	0
11.	**POL**	Poland			**1**	0	0
13.	**NED**	Netherlands				4	3
14.	**CRO**	Croatia				1	0
15.	**CAN**	Canada					1
16.	**ISR**	Israel					
16.	**KSA**	Saudi Arabia					
16.	**MNE**	Montenegro					
16.	**SVK**	Slovakia					

19 nations in this event

19 nations with places 1st-7th (= 100%)

12 nations with medals (= 63%)

ippon.org v3.0 (c) International Judo Federation IJF

Fuengirola Cadet European Cup 2023

Fuengirola (ESP), 18-19 Feb 2023

Statistics

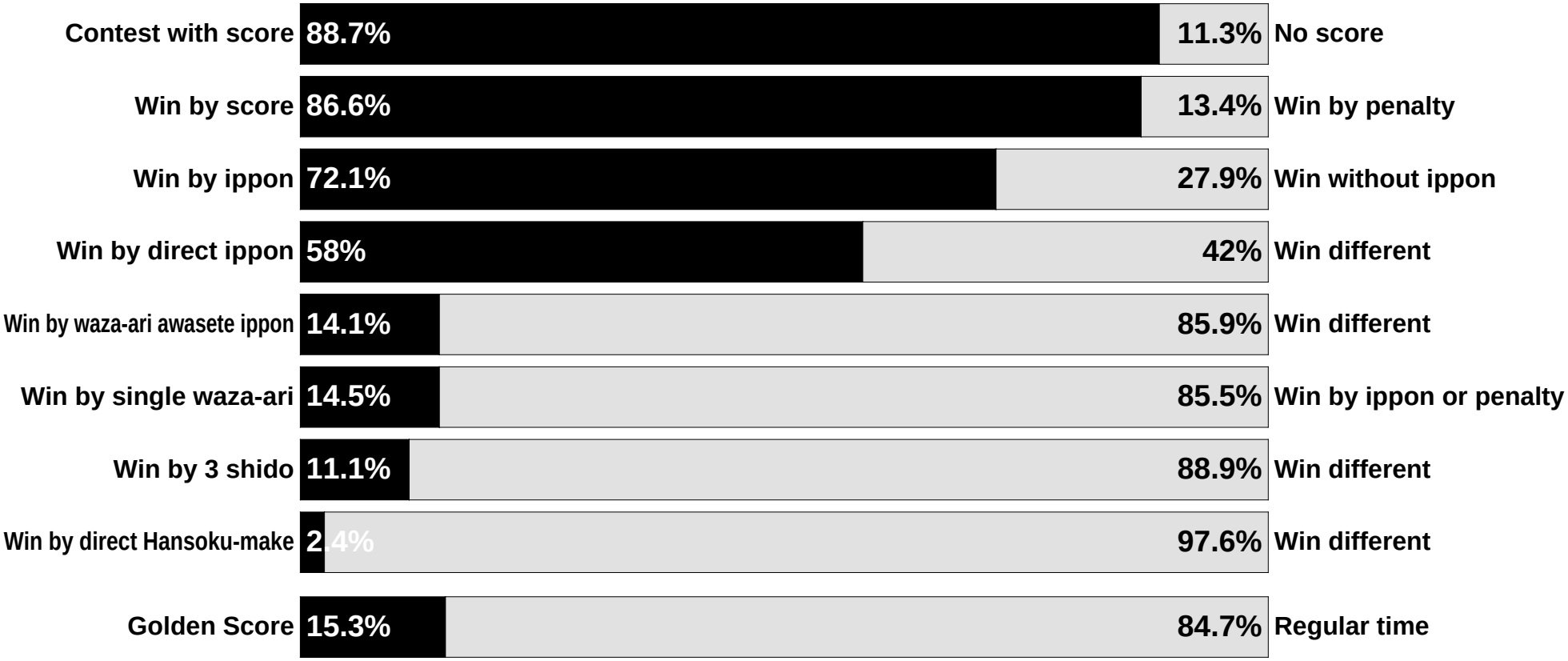

ippon.org v3.0 (c) International Judo Federation IJF

Fuengirola Cadet European Cup 2023

Fuengirola (ESP), 18-19 Feb 2023

Statistics

	-50 kg	-55 kg	-60 kg	-66 kg	-73 kg	-81 kg	-90 kg	+90 kg	-40 kg	-44 kg	-48 kg	-52 kg	-57 kg	-63 kg	-70 kg	+70 kg	Men	Women	Total
Competitors	25	39	57	39	37	36	20	16	5	18	23	34	29	34	22	14	269	179	448
Contests	34	52	69	51	49	49	28	23	6	26	30	45	38	46	29	20	355	240	595
Contests with positive score	30	36	65	47	46	42	26	23	5	22	25	41	35	42	23	20	315	213	528
Contests with positive score %	88.2%	69.2%	94.2%	92.2%	93.9%	85.7%	92.9%	100%	83.3%	84.6%	83.3%	91.1%	92.1%	91.3%	79.3%	100%	88.7%	88.8%	88.7%
Wins by positive score	27	36	65	45	44	41	26	21	5	20	25	40	35	42	23	20	305	210	515
Wins by positive score %	79.4%	69.2%	94.2%	88.2%	89.8%	83.7%	92.9%	91.3%	83.3%	76.9%	83.3%	88.9%	92.1%	91.3%	79.3%	100%	85.9%	87.5%	86.6%
Wins by Ippon	21	31	55	35	37	37	19	21	5	16	17	32	31	35	19	18	256	173	429
Wins by Ippon %	61.8%	59.6%	79.7%	68.6%	75.5%	75.5%	67.9%	91.3%	83.3%	61.5%	56.7%	71.1%	81.6%	76.1%	65.5%	90%	72.1%	72.1%	72.1%
Wins by Waza-ari awasete Ippon	3	8	9	7	10	8	2	8	1	5	2	4	7	2	6	2	55	29	84
Wins by Waza-ari awasete Ippon %	8.8%	15.4%	13%	13.7%	20.4%	16.3%	7.1%	34.8%	16.7%	19.2%	6.7%	8.9%	18.4%	4.3%	20.7%	10%	15.5%	12.1%	14.1%
Wins by waza-ari	6	5	10	10	7	4	7			4	8	8	4	7	4	2	49	37	86
Wins by waza-ari %	17.6%	9.6%	14.5%	19.6%	14.3%	8.2%	25%	0%	0%	15.4%	26.7%	17.8%	10.5%	15.2%	13.8%	10%	13.8%	15.4%	14.5%
Waza-ari	16	12	20	21	23	11	9	12	2	11	11	16	15	16	10	6	124	87	211
Positive Scores	40	51	84	63	70	56	30	41	8	32	30	52	53	53	35	26	435	289	724
Average positive Scores	1.2	1	1.2	1.2	1.4	1.1	1.1	1.8	1.3	1.2	1	1.2	1.4	1.2	1.2	1.3	1.2	1.2	1.2
Shido	51	91	87	60	73	72	25	16	6	32	37	42	39	45	39	24	475	264	739
Average shido per contest	1.5	1.8	1.3	1.2	1.5	1.5	0.9	0.7	1	1.2	1.2	0.9	1	1	1.3	1.2	1.3	1.1	1.2
Wins by 3 shido for opponent	6	13	4	5	5	7	2	1	1	5	3	3	2	3	6		43	23	66
Wins by 3 shido for opponent %	17.6%	25%	5.8%	9.8%	10.2%	14.3%	7.1%	4.3%	16.7%	19.2%	10%	6.7%	5.3%	6.5%	20.7%	0%	12.1%	9.6%	11.1%
Direct Hansoku-make	1	3		1		1		1		1	2	2	1	1			7	7	14
Direct HSKM (Out of tournament)																			
Golden Score	7	11	13	4	9	12	1		1	1	4	10	7	4	5	2	57	34	91
Golden Score %	20.6%	21.2%	18.8%	7.8%	18.4%	24.5%	3.6%	0%	16.7%	3.8%	13.3%	22.2%	18.4%	8.7%	17.2%	10%	16.1%	14.2%	15.3%
Osae-komi	4	22	25	18	12	15	7	4	0	7	15	22	9	23	4	6	107	86	193
Fusen-gachi								1				1	1	1	2		1	5	6

ippon.org v3.0 (c) International Judo Federation IJF

Fuengirola Cadet European Cup 2023

Fuengirola (ESP), 18-19 Feb 2023

Nations

Overview

			-50	-55	-60	-66	-73	-81	-90	+90	m	-40	-44	-48	-52	-57	-63	-70	+70	w	total
1.	CAN	Canada	1		1	1				1	**4**				1		1			**2**	**6**
2.	CRO	Croatia					2				**2**									**0**	**2**
3.	CZE	Czech Republic			1	1		2			**4**		1				1	1	2	**5**	**9**
	EJU	European Judo Union									**0**									**0**	**0**
4.	ESP	Spain	6	9	13	12	8	8	5	6	**67**	2	6	7	8	8	10	4	3	**48**	**115**
5.	EST	Estonia	1	2	4	2	6	5	2	1	**23**			1	1		1		2	**5**	**28**
6.	FIN	Finland						1			**1**					2	1		1	**4**	**5**
7.	FRA	France	6	7	9	7	4	6	4	4	**47**	1	3	5	8	6	5	5	5	**38**	**85**
8.	GBR	Great Britain	3	5	3	5	5	2	1		**24**		2	3	3	3	4	1		**16**	**40**
9.	ISR	Israel									**0**					1	1			**2**	**2**
10.	ITA	Italy	1	5	6	4	2	4	1		**23**	1	3	3	2	2	2	3		**16**	**39**
11.	KSA	Saudi Arabia	1	1	1	1			1	1	**6**				1					**1**	**7**
12.	LTU	Lithuania		2	4	2	3	3	2	1	**17**				2	2	1	3		**8**	**25**
13.	MEX	Mexico			1		1				**2**									**0**	**2**
14.	MGL	Mongolia	1		1		1				**3**				1		1			**2**	**5**
15.	MNE	Montenegro			1						**1**						1			**1**	**2**
16.	NED	Netherlands		2	3	1	1	1	1		**9**		1	1	1	1	1	2		**7**	**16**
17.	POL	Poland					1		1		**2**					1	1			**2**	**4**
18.	POR	Portugal	5	6	9	3	3	4	2	2	**34**	1	1	3	6	3	3	3	1	**21**	**55**
19.	SVK	Slovakia									**0**		1							**1**	**1**
			25	**39**	**57**	**39**	**37**	**36**	**20**	**16**	**269**	**5**	**18**	**23**	**34**	**29**	**34**	**22**	**14**	**179**	**448**

ippon.org v3.0 (c) International Judo Federation IJF

Fuengirola Cadet European Cup 2023

Fuengirola (ESP), 18-19 Feb 2023

-50 kg

25 Judoka

POOL A

- 1 CHATTI, Amza FRA — 17
- 9 TURIBIO, Goncalo POR — 25 CASTRO LOPEZ, Esteban ESP
- 5 RIVERO SANTAMARIA, Aitor ESP — 21 NICOLA, Martim POR
- 13 AZARUMYAN, Artak EST — 29 TANNIAN, Luke GBR

1 CHATTI, Amza (FRA)
2 CASTRO LOPEZ, E. (ESP) — 00 / 10 0:54
3 NICOLA, Martim (POR) — 00 s1 / 10 3:35
4 TANNIAN, Luke (GBR) — 00 s1 / 01 s2 4:57

17 CHATTI, Amza (FRA) — 10 s1 / 00 s1 2:05
18 TANNIAN, Luke (GBR) — 00 / 10 0:53

25 CHATTI, Amza (FRA) — 10 s1 / 00 s1 1:28
Pool A - Winner
Vainqueur / Sieger

POOL B

- 3 SAAKYAN, Alexandre FRA — 19
- 11 VIGUERAS USERO, Pau ESP — 27 MATTHEW, Schesnuik CAN
- 7 CHOIJILJAV, Tuguldur MGL — 23
- 15 PEDROSA, Guilherme POR — 31 CUQ, Axel FRA

5 SAAKYAN, A. (FRA)
6 MATTHEW, S. (CAN) — 01 / 11 3:57
7 CHOIJILJAV, T. (MGL)
8 CUQ, Axel (FRA) — 00 / 11 1:08

19 SAAKYAN, A. (FRA) — 10 / 00 0:17
20 CHOIJILJAV, T. (MGL) — 10 / 00 s3 3:10

26 CHOIJILJAV, T. (MGL) — 00 s3 / 10 5:07
Pool B - Winner
Vainqueur / Sieger

37 CHOIJILJAV, T. (MGL) — 00 s1 / 01 s2 7:39

POOL C

- 2 SASSI, Thomas ITA — 18
- 10 LEBRETON, Pierre FRA — 26 BROTONS CARDENAS, Abel ESP
- 6 HILL, Laurence GBR — 22
- 14 REIS, Afonso POR — 30 LLAMAS VIEJO, Alex ESP

9 SASSI, Thomas (ITA)
10 LEBRETON, Pierre (FRA) — 10 s1 / 00 s3 3:31
11 HILL, Laurence (GBR)
12 LLAMAS VIEJO, A. (ESP) — 00 s3 / 10 s1 2:41

21 LEBRETON, Pierre (FRA) — 00 s1 / 01 s2 4:00
22 HILL, Laurence (GBR) — 10 s2 / 00 s1 4:54

27 LEBRETON, Pierre (FRA) — 01 s1 / 00 s2 4:54
Pool C - Winner
Vainqueur / Sieger

38 LEBRETON, Pierre (FRA) — 10 / 00 s2 2:27

43 LEBRETON, Pierre (FRA) — 00 s1 / 11 2:51
1.

POOL D

- 4 ALFAIFI, Saud KSA — 20
- 12 TAILLEUR, Basile FRA — 28 PINTO, Francisco POR
- 8 LUCAS, Titouan FRA — 24
- 16 MARTIN TORRES, Carlos ESP — 32 ANDERSON, Evan GBR

13 ALFAIFI, Saud (KSA)
14 TAILLEUR, Basile (FRA) — 10 / 00 1:20
15 LUCAS, Titouan (FRA)
16 MARTIN TORRES, C. (ESP) — 10 / 00 0:11

23 ALFAIFI, Saud (KSA) — 10 / 00 0:16
24 MARTIN TORRES, C. (ESP) — 00 / 10 1:15

28 MARTIN TORRES, C. (ESP) — 01 / 11 1:26
Pool D - Winner
Vainqueur / Sieger

Repechage / Trostrunde

[A1]
[A2] CASTRO LOPEZ, Esteban ESP
[B1]
[B2] CUQ, Axel FRA
[C1] BROTONS CARDENAS, Abel ESP
[C2] SASSI, Thomas ITA
[D1] ANDERSON, Evan GBR
[D2] LUCAS, Titouan FRA

29 CASTRO LOPEZ, E. (ESP)
[A3] TANNIAN, Luke (GBR)
30 CUQ, Axel (FRA)
[B3] SAAKYAN, A. (FRA)
31 SASSI, Thomas (ITA) — 00 s1 / 10 1:54
[C3] HILL, Laurence (GBR)
32 LUCAS, Titouan (FRA) — 00 / 10 0:07
[D3] ALFAIFI, Saud (KSA)

33 TANNIAN, Luke (GBR) — 00 / 01 s1 4:24
34 SAAKYAN, A. (FRA) — 00 / 10 3:15
35 SASSI, Thomas (ITA) — 11 / 00 sH 2:32
36 LUCAS, Titouan (FRA) — 11 / 00 0:44

39 SAAKYAN, A. (FRA) — 00 s1 / 10 2:43
[38] MARTIN TORRES, C. (ESP)
40 SASSI, Thomas (ITA) — 11 s1 / 00 s3 3:35
[37] CHATTI, Amza (FRA)

41 SAAKYAN, A. (FRA) — 01 s1 / 00 s2 4:35
3.
42 CHATTI, Amza (FRA) — 00 s3 / 11 s1 3:27
3.

Results
Résultat / Platzierungen

1.	LEBRETON, Pierre	FRA
2.	CHOIJILJAV, Tuguldur	MGL
3.	SAAKYAN, Alexandre	FRA
3.	CHATTI, Amza	FRA
5.	MARTIN TORRES, Carlos	ESP
5.	SASSI, Thomas	ITA
7.	TANNIAN, Luke	GBR
7.	LUCAS, Titouan	FRA

ippon.org v3.0 (c) International Judo Federation IJF

Fuengirola Cadet European Cup 2023

Fuengirola (ESP), 18-19 Feb 2023

-55 kg

39 Judoka

POOL A

1 / 33	BRENIER, Tom	FRA
17 / 49	SILVA, Bernardo Santos	POR
	SANTAMARIA GONZALEZ, Lucas	ESP
9 / 41	FERNANDEZ DE LA IGLESIA, David	ESP
25 / 57	GIANNONE, Stefano	ITA
5 / 37	ZORRETA, Manuel	POR
21 / 53	RICO PEDRIDO, Pablo	ESP
	GARRAMONE, Giovanni	ITA
13 / 45	DUGDALE, Freddie	GBR
29 / 61	IVANOVAS, Mantas	LTU

1 BRENIER, Tom
2 SANTAMARIA GONZALEZ, Lucas — 00 / 10 s1 2:14
3 FERNANDEZ DE LA IGLESIA, David
4 GIANNONE, Stefano
5 ZORRETA, Manuel
6 GARRAMONE, Giovanni — 00 / 10 3:01
7 DUGDALE, Freddie
8 IVANOVAS, Mantas

33 BRENIER, Tom — 10 s1 / 00 s3 4:15
34 GIANNONE, Stefano — 00 / 10 s1 2:05
35 ZORRETA, Manuel — 01 s1 / 00 s1 3:15
36 DUGDALE, Freddie — 10 s1 / 00 s3 3:30

49 BRENIER, Tom — 10 s1 / 00 s3 2:43
50 ZORRETA, Manuel — 01 / 00 s2 5:58

57 BRENIER, Tom — 10 s1 / 00 s3 6:50
Pool A

POOL B

3 / 35	RICHARDSON, Luca	NED
19 / 51	ELIAS, Joao	POR
11 / 43	FALLAHDAR, Rastin	GBR
27 / 59	TALON, Tiago	FRA
	SANZ AVILA, Daniel	ESP
7 / 39	ROSADO LOPEZ, Rodrigo	ESP
23 / 55	SANNA, Riccardo	ITA
15 / 47	QUENTIN, Sasha	FRA
31 / 63	SHCHEKOTIN, Filipp	EST

9 RICHARDSON, Luca
10 ELIAS, Joao
11 FALLAHDAR, Rastin
12 TALON, Tiago — 10 / 00 s1 1:09
13 ROSADO LOPEZ, Rodrigo
14 SANNA, Riccardo
15 QUENTIN, Sasha
16 SHCHEKOTIN, Filipp

37 RICHARDSON, Luca — 10 / 00 0:34
38 TALON, Tiago — 00 s1 / 10 2:21
39 ROSADO LOPEZ, Rodrigo — 10 / 00 1:07
40 QUENTIN, Sasha — 10 / 01 s1 2:28

51 TALON, Tiago — 00 / 10 0:41
52 ROSADO LOPEZ, Rodrigo — 10 / 00 1:15

58 TALON, Tiago — 10 / 00 s2 3:55
Pool B

73 TALON, Tiago — 00 s3 / 10 s1 7:57

POOL C

2 / 34	CHRANIUK, Jesse	GBR
18 / 50	CAETANO, Diogo	POR
	KAHAR, Rihard Joosep	EST
10 / 42	PENAS MERINO, Unai	ESP
26 / 58	HAMADI, Ihsane	FRA
6 / 38	PELLIZZARO, Mattia	ITA
22 / 54	PAIVA, Nuno	POR
14 / 46	GAVAZZI, Romain	FRA
30 / 62	MILLAN SALAS, Pablo	ESP
	GHEORGHIU, David	GBR

17 CHRANIUK, Jesse
18 CAETANO, Diogo — 10 / 00 0:45
19 PENAS MERINO, Unai
20 HAMADI, Ihsane
21 PELLIZZARO, Mattia
22 PAIVA, Nuno
23 GAVAZZI, Romain
24 MILLAN SALAS, Pablo — 10 s1 / 00 s1 3:16

41 CHRANIUK, Jesse — 10 s1 / 00 s3 3:17
42 HAMADI, Ihsane — 00 / 10 s1 2:05
43 PELLIZZARO, Mattia — 10 / 00 s2 1:50
44 MILLAN SALAS, Pablo — 00 / 10 1:29

53 CHRANIUK, Jesse — 01 s2 / 00 s1 4:00
54 PELLIZZARO, Mattia — 10 / 00 s3 3:40

59 CHRANIUK, Jesse — 11 s1 / 00 3:41
Pool C

POOL D

4 / 36	GVAZDAUSKAS, Raidas	LTU
20 / 52	MIVOVAN, Adrian	FRA
	OLMO ESTEVEZ, Nicolas	ESP
12 / 44	REIS, Guilherme	POR
28 / 60	GIGILASHVILI, Luka	GBR
8 / 40	SUSEBEEK, Bo	NED
24 / 56	BOVO, Ethan	FRA
16 / 48	DAVYDIAN, Ernest	ESP
	ASIRI, Ibrahim	KSA
32 / 64	CIAVURRO, Niccolo	ITA

25 GVAZDAUSKAS, Raidas
26 MIVOVAN, Adrian — 11 / 00 1:00
27 REIS, Guilherme
28 GIGILASHVILI, Luka
29 SUSEBEEK, Bo
30 BOVO, Ethan
31 DAVYDIAN, Ernest — 10 / 01 s2 2:29
32 CIAVURRO, Niccolo

45 MIVOVAN, Adrian — 00 s3 / 10 2:03
46 GIGILASHVILI, Luka — 00 s3 / 10 s1 2:19
47 BOVO, Ethan — 00 / 10 5:04
48 DAVYDIAN, Ernest — 10 s1 / 01 s2 2:54

55 MIVOVAN, Adrian — 10 / 00 s1 1:17
56 BOVO, Ethan — 11 / 00 2:03

60 MIVOVAN, Adrian — 10 s2 / 00 s3 5:11
Pool D

74 MIVOVAN, Adrian — 00 sH / 10 s1 2:42

79 MIVOVAN, Adrian — 00 / 10 0:16
1.

1.	MIVOVAN, Adrian	FRA
2.	TALON, Tiago	FRA
3.	CHRANIUK, Jesse	GBR
3.	BOVO, Ethan	FRA
5.	ZORRETA, Manuel	POR
5.	BRENIER, Tom	FRA
7.	RICHARDSON, Luca	NED
7.	PELLIZZARO, Mattia	ITA

[A1]
[A2] SANTAMARIA GONZALEZ, Lucas ESP
[B1] SANZ AVILA, Daniel ESP
[B2] FALLAHDAR, Rastin GBR

61 SANTAMARIA GONZALEZ, Lucas
62 FALLAHDAR, Rastin — 00 s1 / 10 0:57
[A3] GIANNONE, Stefano
[B3] RICHARDSON, Luca

65 GIANNONE, Stefano — 00 s3 / 10 4:16
66 RICHARDSON, Luca — 00 s2 / 10 s2 5:35
[A4] ZORRETA, Manuel
[B4] ROSADO LOPEZ, Rodrigo

69 ZORRETA, Manuel — 00 s3 / 10 2:27
70 RICHARDSON, Luca — 10 s2 / 01 2:26

75 ZORRETA, Manuel — 10 s2 / 00 s3 4:41
[74] CHRANIUK, Jesse

77 CHRANIUK, Jesse — 00 s2 / 01 s1 4:08
3.

[C1]
[C2] CAETANO, Diogo POR
[D1] OLMO ESTEVEZ, Nicolas ESP
[D2] GVAZDAUSKAS, Raidas LTU

63 CAETANO, Diogo
64 GVAZDAUSKAS, Raidas — 00 / 10 2:45
[C3] HAMADI, Ihsane
[D3] GIGILASHVILI, Luka

67 HAMADI, Ihsane — 00 s2 / 01 4:00
68 GIGILASHVILI, Luka — 00 / 10 s1 3:18
[C4] PELLIZZARO, Mattia
[D4] BOVO, Ethan

71 PELLIZZARO, Mattia — 00 / 10 0:48
72 BOVO, Ethan — 00 s1 / 10 0:59

76 BOVO, Ethan — 00 sH / 10 4:57
[73] BRENIER, Tom

78 BOVO, Ethan — 10 s1 / 00 sH 0:42
3.

ippon.org v3.0 (c) International Judo Federation IJF

Fuengirola Cadet European Cup 2023

Fuengirola (ESP), 18-19 Feb 2023

-60 kg

57 Judoka

POOL A

1 / 33	SAGASTEGUI, Eduardo	MEX
17 / 49	SANCHEZ LOPEZ, Juan / COSTA, Carlos	ESP / POR
9 / 41	KPADONOU, Elyas / SUR, Mihhail	FRA / EST
25 / 57	SUKHBAATAR, Khatanbaatar / KARALEVICIUS, Zygimantas	MGL / LTU
5 / 37	ALKHALDI, Hamad / BAUTISTA SUAREZ, Ruben	KSA / ESP
21 / 53	ALMEIDA, Alexandre / PICARD, Matthieu	POR / FRA
13 / 45	MERINO JAEN, Alvaro / GONSAN, Gabriel Matthew	ESP / ITA
29 / 61	VAN HUIJSTEE, Midas / GHIGLIERI, Nicolo	NED / ITA

1 SAGASTEGUI, Eduardo
2 COSTA, Carlos 00 / 10 2:41
3 KPADONOU, Elyas 10 s1 / 00 s1 4:35
4 SUKHBAATAR, Khatanbaatar 10 / 00 1:23
5 ALKHALDI, Hamad 10 s2 / 01 3:52
6 ALMEIDA, Alexandre 01 s1 / 00 s1 4:00
7 GONSAN, Gabriel Matthew 00 / 10 0:26
8 VAN HUIJSTEE, Midas 10 / 00 1:54

33 SAGASTEGUI, Eduardo 01 / 00 s1 4:00
34 KPADONOU, Elyas
35 ALMEIDA, Alexandre 01 s1 / 10 5:01
36 VAN HUIJSTEE, Midas 00 s2 / 10 s1 6:51

49 SAGASTEGUI, Eduardo 10 s1 / 00 s3 3:29
50 VAN HUIJSTEE, Midas 00 / 10 3:21

57 SAGASTEGUI, Eduardo 10 s1 / 00 s1 3:39
Pool A

POOL B

3 / 35	GUETTARI, Kais	FRA
19 / 51	SHENGELIA, Nikoloz / TAVARES, Guilherme	GBR / POR
11 / 43	MELE, Riccardo / GAMEZ RODRIGUEZ, Antonio	ITA / ESP
27 / 59	DJURISIC, Balsa / ZITA, Ondrej	MNE / CZE
7 / 39	BARTHELEMY CHAUVEL, Gabin	FRA
23 / 55	LAVRINJOV, Volodomor / FRAILE RAMOS, Jesus	EST / ESP
15 / 47	VAN DER KRUK, Dinand / TORRECILLAS MARTINEZ, Samuel	NED / ESP
31 / 63	GATA, Mateus / KASPARAVICIUS, Nidijus	POR / LTU

9 GUETTARI, Kais
10 SHENGELIA, Nikoloz 01 / 00 4:00
11 GAMEZ RODRIGUEZ, Antonio 00 / 10 1:04
12 ZITA, Ondrej 00 s3 / 10 2:08
13 BARTHELEMY CHAUVEL, Gabin
14 LAVRINJOV, Volodomor 10 / 00 0:42
15 VAN DER KRUK, Dinand 10 / 00 0:15
16 KASPARAVICIUS, Nidijus 01 s2 / 10 s1 4:50

37 GUETTARI, Kais 10 / 00 1:01
38 GAMEZ RODRIGUEZ, Antonio 01 / 00 s1 4:00
39 BARTHELEMY CHAUVEL, Gabin 10 / 00 1:22
40 VAN DER KRUK, Dinand 10 / 00 s1 2:32

51 GUETTARI, Kais 10 / 00 s2 2:46
52 BARTHELEMY CHAUVEL, Gabin 11 / 00 s2 2:29

58 GUETTARI, Kais 10 s1 / 00 s1 2:59
Pool B

73 GUETTARI, Kais 00 s2 / 10 s2 6:50

POOL C

2 / 34	POLIKEVICIUS, Simas	LTU
18 / 50	NEPTON, Vincent / LYSOGOR CHERKESOV, Maxim	CAN / ESP
10 / 42	PALILLO, Thomas / MITCHELL, Alfie	ITA / GBR
26 / 58	PATA, Leonardo / DIETEMANN, Nathan	POR / FRA
6 / 38	ADRIANO, Maxence	FRA
22 / 54	SOARES, Afonso / MIRANDA GALINDO, Eduardo	POR / ESP
14 / 46	FELIO ROBLES, Alejandro / ATTANASI, Cristian	ESP / ITA
30 / 62	JAKIMOV, Robert / GIMENEZ, Maxence	EST / FRA

17 POLIKEVICIUS, Simas
18 NEPTON, Vincent 10 / 00 3:17
19 PALILLO, Thomas 10 / 00 0:50
20 DIETEMANN, Nathan 00 s2 / 10 3:52
21 ADRIANO, Maxence
22 MIRANDA GALINDO, Eduardo 00 / 10 0:31
23 FELIO ROBLES, Alejandro 10 / 00 2:42
24 GIMENEZ, Maxence 00 / 10 s1 3:51

41 POLIKEVICIUS, Simas 10 / 01 s1 4:49
42 PALILLO, Thomas 01 / 00 5:09
43 ADRIANO, Maxence 01 s2 / 00 s2 4:00
44 FELIO ROBLES, Alejandro 10 s2 / 00 3:48

53 POLIKEVICIUS, Simas 01 s2 / 00 s1 5:24
54 ADRIANO, Maxence 11 / 00 3:01

59 ADRIANO, Maxence 00 s2 / 01 s2 4:00
Pool C

74 ADRIANO, Maxence 10 s1 / 00 s3 4:23

POOL D

4 / 36	SILVA, David	POR
20 / 52	GRACIA SANCHEZ, Leo / COLIN, Zachary	ESP / FRA
12 / 44	FLORES RIPALDA, Jose Antonio / BRONSVOORD, Jarno	ESP / NED
28 / 60	VAGULIS, Danas / MCWATT, Ross	LTU / GBR
8 / 40	CLARK, Peter	EST
24 / 56	DUARTE, Goncalo / UTRERO CRESPO, Iker	POR / ESP
16 / 48	MARTIN LOBO, Pablo / GBINGBEHI, Johan	ESP / FRA
32 / 64	GHIGLIERI, Edoardo / SILVA, Manuel	ITA / POR

25 SILVA, David
26 COLIN, Zachary 00 / 10 1:07
27 FLORES RIPALDA, Jose Antonio 10 / 00 1:41
28 MCWATT, Ross 01 s1 / 10 s2 8:42
29 CLARK, Peter
30 UTRERO CRESPO, Iker 00 / 10 1:01
31 GBINGBEHI, Johan 00 s1 / 10 2:09
32 GHIGLIERI, Edoardo 10 / 00 s2 1:56

45 SILVA, David 01 s1 / 00 s2 4:00
46 MCWATT, Ross 00 s2 / 10 s2 4:33
47 UTRERO CRESPO, Iker 00 / 10 0:37
48 GBINGBEHI, Johan 10 / 00 0:48

55 MCWATT, Ross 00 s3 / 10 s2 6:32
56 GBINGBEHI, Johan 00 s1 / 11 s1 1:05

60 GBINGBEHI, Johan 00 s2 / 10 2:15
Pool D

GUETTARI, Kais 10 s1 / 00 s1 3:19 — **1.**

1.	GUETTARI, Kais	FRA
2.	ADRIANO, Maxence	FRA
3.	GBINGBEHI, Johan	FRA
3.	SAGASTEGUI, Eduardo	MEX
5.	BARTHELEMY CHAUVEL, Gabin	FRA
5.	UTRERO CRESPO, Iker	ESP
7.	COSTA, Carlos	POR
7.	MIRANDA GALINDO, Eduardo	ESP

[A1]
[A2] COSTA, Carlos POR
[B1]
[B2] SHENGELIA, Nikoloz GBR
[C1]
[C2] MIRANDA GALINDO, Eduardo ESP
[D1] MARTIN LOBO, Pablo ESP
[D2] GHIGLIERI, Edoardo ITA

61 COSTA, Carlos
[A3] KPADONOU, Elyas
62 SHENGELIA, Nikoloz
[B3] GAMEZ RODRIGUEZ, Antonio
63 MIRANDA GALINDO, Eduardo
[C3] FELIO ROBLES, Alejandro
64 MARTIN LOBO, Pablo 11 / 00 0:33
[D3] UTRERO CRESPO, Iker

65 COSTA, Carlos 10 / 00 2:51
[A4] VAN HUIJSTEE, Midas
66 GAMEZ RODRIGUEZ, Antonio 00 s1 / 10 2:34
[B4] BARTHELEMY CHAUVEL, Gabin
67 MIRANDA GALINDO, Eduardo 10 / 00 s1 5:01
[C4] POLIKEVICIUS, Simas
68 UTRERO CRESPO, Iker 00 / 10 0:07
[D4] MCWATT, Ross

69 COSTA, Carlos 10 s1 / 00 s1 1:42
70 BARTHELEMY CHAUVEL, Gabin 10 / 10 1:40
71 MIRANDA GALINDO, Eduardo 10 s1 / 00 1:09
72 UTRERO CRESPO, Iker 10 / 00 0:36

75 BARTHELEMY CHAUVEL, Gabin 00 s1 / 01 4:00
[74] GBINGBEHI, Johan
76 UTRERO CRESPO, Iker 00 / 11 1:42
[73] SAGASTEGUI, Eduardo

77 GBINGBEHI, Johan 00 / 10 2:59 — **3.**
78 SAGASTEGUI, Eduardo 00 s1 / 10 1:17 — **3.**

ippon.org v3.0 (c) International Judo Federation IJF

Fuengirola Cadet European Cup 2023

Fuengirola (ESP), 18-19 Feb 2023

-66 kg

39 Judoka

POOL A

1 / 33	JANEIRO, Rodrigo	POR
17 / 49	CARAZO LACUNZA, Julio	ESP
9 / 41	SALAH, Mehdi PONTE BARCA, Raul	FRA ESP
25 / 57	NOVIKOV, Jegor	EST
5 / 37	FITHANE, Fahd	CAN
21 / 53	PLA ZANUY, Sandro	ESP
13 / 45	HUTCHINSON, Travis	GBR
29 / 61	CARABOTTO, Giuseppe	ITA

1 JANEIRO, Rodrigo
2 CARAZO LACUNZA, Julio
3 SALAH, Mehdi
11 s1 / 00 s3 2:09
4 NOVIKOV, Jegor
5 FITHANE, Fahd
6 PLA ZANUY, Sandro
7 HUTCHINSON, Travis
8 CARABOTTO, Giuseppe

33 JANEIRO, Rodrigo
11 / 00 2:11
34 NOVIKOV, Jegor
00 / 01 s2 4:00
35 FITHANE, Fahd
01 s1 / 00 s2 4:40
36 CARABOTTO, Giuseppe
00 s3 / 10 s1 2:45

49 JANEIRO, Rodrigo
10 / 00 1:24
50 CARABOTTO, Giuseppe
00 s3 / 10 s1 6:19

57 JANEIRO, Rodrigo
10 / 00 s1 2:25
Pool A

POOL B

3 / 35	DAVIES, Peter	GBR
19 / 51	LENER, Medhi	FRA
11 / 43	NICOSIA, Enrico	ITA
27 / 59	JIMENEZ LOPEZ, David FAIRAQ, Abdulaziz	ESP KSA
7 / 39	CHAMBERS-EDUTIE, Kyras	GBR
23 / 55	HARROU, Anas PARRILLA MUNOZ, Daniel	FRA ESP
15 / 47	FISER, Stepan	CZE
31 / 63	TREJO QUINTANA, Marcos	ESP

9 DAVIES, Peter
10 LENER, Medhi
11 NICOSIA, Enrico
12 FAIRAQ, Abdulaziz
01 / 10 1:41
13 CHAMBERS-EDUTIE, Kyras
14 PARRILLA MUNOZ, Daniel
00 / 10 1:13
15 FISER, Stepan
16 TREJO QUINTANA, Marcos

37 LENER, Medhi
00 s3 / 10 2:53
38 FAIRAQ, Abdulaziz
00 s1 / 11 1:37
39 PARRILLA MUNOZ, Daniel
00 s2 / 01 4:00
40 FISER, Stepan
10 / 00 1:05

51 LENER, Medhi
10 / 00 0:17
52 PARRILLA MUNOZ, Daniel
01 / 00 s2 4:00

58 PARRILLA MUNOZ, Daniel
00 s1 / 10 2:45
Pool B

73 PARRILLA MUNOZ, Daniel
00 s1 / 11 3:53

POOL C

2 / 34	GOGINASHVILI, Irakli	GBR
18 / 50	MANNEBEEK, Luuk JAKIMOV, Edward	NED EST
10 / 42	AL MOHAMMAD, Naser	FRA
26 / 58	MARI ALCUBIERRE, David	ESP
6 / 38	BICORGNI, Alessandro	ITA
22 / 54	QUEREDA YURICE, Hugo	ESP
14 / 46	CABROL, Lilian RICO, Rafael	FRA POR
30 / 62	PALACIOS ROMERO, Beltran	ESP

17 GOGINASHVILI, Irakli
18 MANNEBEEK, Luuk
10 / 01 s1 1:26
19 AL MOHAMMAD, Naser
20 MARI ALCUBIERRE, David
21 BICORGNI, Alessandro
22 QUEREDA YURICE, Hugo
23 CABROL, Lilian
01 s2 / 00 s1 4:00
24 PALACIOS ROMERO, Beltran

41 GOGINASHVILI, Irakli
10 / 00 0:59
42 MARI ALCUBIERRE, David
00 s1 / 10 3:34
43 QUEREDA YURICE, Hugo
00 s1 / 10 s1 3:50
44 CABROL, Lilian
10 / 00 1:43

53 GOGINASHVILI, Irakli
10 / 00 1:47
54 QUEREDA YURICE, Hugo
01 s2 / 00 4:00

59 GOGINASHVILI, Irakli
10 / 00 0:19
Pool C

74 GOGINASHVILI, Irakli
10 / 00 1:21

79 GOGINASHVILI, Irakli
00 / 01 s1 4:00
1.

POOL D

4 / 36	JOVSA, Deividas	LTU
20 / 52	INFANZON OCAMPO, Carlos TEMCIUC, Denis	ESP ITA
12 / 44	NZE BEKALE, Kylian	FRA
28 / 60	MELO, Vicente	POR
8 / 40	BOLZAN, Nikita	LTU
24 / 56	LOPEZ DE GUERENO ARMAZA, Ignacio MUINO BOVE, Joaquim	ESP FRA
16 / 48	DENIZ, Thomas	GBR
32 / 64	GARCIA ESPANA, Jon	ESP

25 JOVSA, Deividas
26 INFANZON OCAMPO, Carlos
10 s1 / 00 s1 1:26
27 NZE BEKALE, Kylian
28 MELO, Vicente
29 BOLZAN, Nikita
30 MUINO BOVE, Joaquim
00 / 10 s1 3:51
31 DENIZ, Thomas
32 GARCIA ESPANA, Jon

45 INFANZON OCAMPO, Carlos
01 s3 / 10 3:50
46 NZE BEKALE, Kylian
10 / 00 0:27
47 BOLZAN, Nikita
01 s1 / 00 4:00
48 DENIZ, Thomas
01 s1 / 00 s1 4:00

55 NZE BEKALE, Kylian
00 s2 / 10 2:45
56 BOLZAN, Nikita
10 / 00 2:28

60 NZE BEKALE, Kylian
10 s1 / 01 1:30
Pool D

1.	GOGINASHVILI, Irakli	GBR
2.	PARRILLA MUNOZ, Daniel	ESP
3.	NZE BEKALE, Kylian	FRA
3.	QUEREDA YURICE, Hugo	ESP
5.	CARAZO LACUNZA, Julio	ESP
5.	JANEIRO, Rodrigo	POR
7.	CHAMBERS-EDUTIE, Kyras	GBR
7.	INFANZON OCAMPO, Carlos	ESP

[A1]
[A2] CARAZO LACUNZA, Julio ESP
[B1] HARROU, Anas FRA
[B2] CHAMBERS-EDUTIE, Kyras GBR
[C1]
[C2] MANNEBEEK, Luuk NED
[D1]
[D2] MELO, Vicente POR

61 CARAZO LACUNZA, Julio
[A3] NOVIKOV, Jegor
62 CHAMBERS-EDUTIE, Kyras
00 / 10 3:00
[B3] FISER, Stepan
63 MANNEBEEK, Luuk
[C3] MARI ALCUBIERRE, David
64 MELO, Vicente
[D3] INFANZON OCAMPO, Carlos

65 CARAZO LACUNZA, Julio
01 / 00 s2 4:00
[A4] CARABOTTO, Giuseppe
66 CHAMBERS-EDUTIE, Kyras
10 s2 / 00 s2 8:07
[B4] LENER, Medhi
67 MANNEBEEK, Luuk
10 / 00 0:09
[C4] QUEREDA YURICE, Hugo
68 INFANZON OCAMPO, Carlos
00 / 11 0:40
[D4] BOLZAN, Nikita

69 CARAZO LACUNZA, Julio
10 / 00 0:30
70 CHAMBERS-EDUTIE, Kyras
10 / 00 sH 3:51
71 QUEREDA YURICE, Hugo
00 / 10 0:55
72 INFANZON OCAMPO, Carlos
10 / 00 0:56

75 CARAZO LACUNZA, Julio
11 / 00 s1 3:03
[74] NZE BEKALE, Kylian
76 QUEREDA YURICE, Hugo
10 / 00 0:08
[73] JANEIRO, Rodrigo

77 NZE BEKALE, Kylian
01 s1 / 10 s2 3:53
3.
78 QUEREDA YURICE, Hugo
10 / 00 1:41
3.

ippon.org v3.0 (c) International Judo Federation IJF

Fuengirola Cadet European Cup 2023

Fuengirola (ESP), 18-19 Feb 2023

-73 kg

37 Judoka

POOL A

1 / 33	TAVOLETTA, Lucio	ITA
17 / 49	ACHOUR ARTILES, Salem SAAR, Karl	ESP EST
9 / 41	RAMIREZ, Rafael	MEX
25 / 57	RUBIO RUIZ, Oriol	GBR
5 / 37	BELLEVAL, Jawanys	FRA
21 / 53	ORTIZ RUEDA, David	ESP
13 / 45	HOPE, Isaac	GBR
29 / 61	VAISVILA, Julius	LTU

1 TAVOLETTA, Lucio
2 SAAR, Karl — 00 / 10 s1 1:24
3 RAMIREZ, Rafael
4 RUBIO RUIZ, Oriol
5 BELLEVAL, Jawanys
6 ORTIZ RUEDA, David
7 HOPE, Isaac
8 VAISVILA, Julius

33 TAVOLETTA, Lucio — 11 / 00 1:00
34 RAMIREZ, Rafael — 10 / 00 2:19
35 BELLEVAL, Jawanys — 10 / 00 s1 0:22
36 HOPE, Isaac — 10 s1 / 00 s1 1:35

49 TAVOLETTA, Lucio — 11 / 00 0:56
50 BELLEVAL, Jawanys — 11 / 00 s1 3:52

57 TAVOLETTA, Lucio — 11 / 00 s3 3:32
Pool A

POOL B

3 / 35	DIKAJEV, Saad	EST
19 / 51	SUAREZ MEDINA, Bayron Andres	ESP
11 / 43	MAGALHAES, Tomas	POR
27 / 59	KACZOREK, Mikolaj	POL
7 / 39	HEFFERNAN, Eden	GBR
23 / 55	GARCIA TENA, Javier BOUE, Noah	ESP FRA
15 / 47	RADOLOVIC, Edvard	CRO
31 / 63	TALPAS, Armin-Ott	EST

9 DIKAJEV, Saad
10 SUAREZ MEDINA, Bayron Andres
11 MAGALHAES, Tomas
12 KACZOREK, Mikolaj
13 HEFFERNAN, Eden
14 BOUE, Noah — 00 / 10 0:49
15 RADOLOVIC, Edvard
16 TALPAS, Armin-Ott

37 DIKAJEV, Saad — 10 s1 / 00 s2 2:14
38 KACZOREK, Mikolaj — 00 / 10 0:34
39 BOUE, Noah — 00 / 10 2:53
40 RADOLOVIC, Edvard — 10 / 00 0:53

51 KACZOREK, Mikolaj — 01 s2 / 10 s2 5:09
52 BOUE, Noah — 01 / 00 s1 4:00

58 KACZOREK, Mikolaj — 11 s1 / 00 s2 4:00
Pool B

POOL C

2 / 34	MOLINARO, Giulio	ITA
18 / 50	MOURA, Guilherme	POR
10 / 42	MARTIN BRILLO, Aaron VAAT, Rainis	ESP EST
26 / 58	MARCZAK, Derek	GBR
6 / 38	KASESALU, Christian-Marcus	EST
22 / 54	GACHET, Enzo	FRA
14 / 46	LUCAS CAMPOS, Miguel	ESP
30 / 62	RACKA, Norbertas	LTU

17 MOLINARO, Giulio
18 MOURA, Guilherme
19 VAAT, Rainis — 00 / 10 2:19
20 MARCZAK, Derek
21 KASESALU, Christian-Marcus
22 GACHET, Enzo
23 LUCAS CAMPOS, Miguel
24 RACKA, Norbertas

41 MOLINARO, Giulio — 01 s1 / 00 s2 5:06
42 MARCZAK, Derek — 00 / 11 0:23
43 GACHET, Enzo — 01 s2 / 10 2:47
44 LUCAS CAMPOS, Miguel — 10 / 00 s1 1:37

53 MARCZAK, Derek — 00 / 10 0:22
54 LUCAS CAMPOS, Miguel — 00 s1 / 10 1:41

59 MARCZAK, Derek — 10 / 00 s1 1:06
Pool C

POOL D

4 / 36	BADRAKH, Shinetulga	MGL
20 / 52	MOYA MORILLA, Nauzet	ESP
12 / 44	GRABLEVSKIJ, Daniel	LTU
28 / 60	SIIM, Ralf Oskar KRAJCAR, Paolo	EST CRO
8 / 40	FINLAY, Strang	GBR
24 / 56	DOBBELAER, Kynan	NED
16 / 48	DUARTE, Junior	POR
32 / 64	MARIN PIFARRE, Adria JACQUELINE, Thomas	ESP FRA

25 BADRAKH, Shinetulga
26 MOYA MORILLA, Nauzet
27 GRABLEVSKIJ, Daniel
28 KRAJCAR, Paolo — 00 s1 / 10 2:07
29 FINLAY, Strang
30 DOBBELAER, Kynan
31 DUARTE, Junior
32 JACQUELINE, Thomas — 00 s3 / 10 s1 2:18

45 BADRAKH, Shinetulga — 10 s1 / 00 s2 5:12
46 KRAJCAR, Paolo — 00 / 10 0:53
47 FINLAY, Strang — 01 s2 / 00 5:28
48 JACQUELINE, Thomas — 01 s1 / 11 s1 5:25

55 KRAJCAR, Paolo — 00 s2 / 10 s1 5:31
56 JACQUELINE, Thomas — 00 s3 / 10 s2 5:17

60 KRAJCAR, Paolo — 01 s2 / 00 s2 4:00
Pool D

73 TAVOLETTA, Lucio — 10 / 00 0:10
74 MARCZAK, Derek — 01 / 00 s2 4:00

79 TAVOLETTA, Lucio — 10 s1 / 00 s1 3:36
1.

1.	TAVOLETTA, Lucio	ITA
2.	MARCZAK, Derek	GBR
3.	BELLEVAL, Jawanys	FRA
3.	KACZOREK, Mikolaj	POL
5.	KRAJCAR, Paolo	CRO
5.	BADRAKH, Shinetulga	MGL
7.	DIKAJEV, Saad	EST
7.	MOLINARO, Giulio	ITA

[A1]
[A2] SAAR, Karl — EST
[A3] RAMIREZ, Rafael
[B1]
[B2] MAGALHAES, Tomas — POR
[B3] DIKAJEV, Saad
[C1]
[C2] VAAT, Rainis — EST
[C3] MOLINARO, Giulio
[D1] SIIM, Ralf Oskar — EST
[D2] GRABLEVSKIJ, Daniel — LTU
[D3] BADRAKH, Shinetulga
[A4] BELLEVAL, Jawanys
[B4] BOUE, Noah
[C4] LUCAS CAMPOS, Miguel
[D4] JACQUELINE, Thomas
[73] KACZOREK, Mikolaj
[74] KRAJCAR, Paolo

61 SAAR, Karl
62 MAGALHAES, Tomas
63 VAAT, Rainis
64 GRABLEVSKIJ, Daniel — 00 / 10 3:04

65 SAAR, Karl — 11 / 01 s3 4:44
66 DIKAJEV, Saad — 00 s1 / 11 0:58
67 MOLINARO, Giulio — 00 / 10 0:27
68 BADRAKH, Shinetulga — 00 / 11 1:07

69 BELLEVAL, Jawanys — 00 s1 / 10 3:02
70 DIKAJEV, Saad — 11 s2 / 00 s2 3:09
71 MOLINARO, Giulio — 01 s1 / 00 4:00
72 BADRAKH, Shinetulga — 10 s1 / 00 s3 3:03

75 BELLEVAL, Jawanys — 10 / 01 1:13
76 BADRAKH, Shinetulga — 00 s1 / 01 7:56

77 BELLEVAL, Jawanys — 10 / 00 s1 1:19
3.

78 KACZOREK, Mikolaj — 00 s2 / 10 1:48
3.

ippon.org v3.0 (c) International Judo Federation IJF

Fuengirola Cadet European Cup 2023

Fuengirola (ESP), 18-19 Feb 2023

-81 kg

36 Judoka

POOL A

1 / 33	DURBANO, Alessandro Bruno	ITA	
17 / 49	ROBIN, Lenny	FRA	
9 / 41	FREIRE GONZALEZ, Nicolas	ESP	
25 / 57	DIAS, Afonso	POR	
5 / 37	ENERIZ GARCIA, Arkaitz	ESP	
21 / 53	KOMIN, Kirill	EST	
13 / 45	JAKS, Adam	CZE	
29 / 61	RILEY, George / GENEVICIUS, Tajus	GBR / LTU	

1 DURBANO, Alessandro Bruno
2 ROBIN, Lenny
3 FREIRE GONZALEZ, Nicolas
4 DIAS, Afonso
5 ENERIZ GARCIA, Arkaitz
6 KOMIN, Kirill
7 JAKS, Adam
8 RILEY, George — 10 / 00 2:44

33 DURBANO, Alessandro Bruno — 10 / 00 s1 3:11
34 DIAS, Afonso — 00 s1 / 10 2:47
35 ENERIZ GARCIA, Arkaitz — 10 s1 / 00 s2 3:53
36 JAKS, Adam — 10 / 00 2:01

49 DURBANO, Alessandro Bruno — 10 / 00 0:49
50 JAKS, Adam — 00 / 11 2:02

57 DURBANO, Alessandro Bruno — 10 / 00 s3 2:25 — **Pool A**

POOL B

3 / 35	CLAVERIO, Marco	ITA	
19 / 51	GNAFOUA, David	FRA	
11 / 43	COUTINHO, Tiago / BRABANDER, Tim	POR / NED	
27 / 59	YANKEVYCH NAGORNIY, Bogdan	ESP	
7 / 39	FARNESI, Matteo	ITA	
23 / 55	HANNETELLE, Nils	FRA	
15 / 47	VAHTER, Taavi	EST	
31 / 63	ARILLA NASARRE, Raul	ESP	

9 CLAVERIO, Marco
10 GNAFOUA, David
11 COUTINHO, Tiago — 10 / 00 s1 1:03
12 YANKEVYCH NAGORNIY, Bogdan — 10 / 00 0:41
13 FARNESI, Matteo
14 HANNETELLE, Nils
15 VAHTER, Taavi
16 ARILLA NASARRE, Raul

37 GNAFOUA, David — 00 / 11 2:09
38 COUTINHO, Tiago
39 FARNESI, Matteo — 10 s2 / 00 s3 8:16
40 ARILLA NASARRE, Raul — 00 / 10 0:41

51 COUTINHO, Tiago — 00 / 10 1:16
52 FARNESI, Matteo — 10 / 00 s3 2:55

58 COUTINHO, Tiago — 10 / 00 0:36 — **Pool B**

POOL C

2 / 34	HUKKANEN, Aleksi	FIN	
18 / 50	TCHELISHVILI, Akaki	ESP	
10 / 42	COPAT, Leonardo / NARKUS, Vygirdas	ITA / LTU	
26 / 58	RAIDMA, Kaspar	EST	
6 / 38	GROSSIR LEOUSSIS, Dylan	FRA	
22 / 54	RODRIGUEZ NARANJO, Leonel	ESP	
14 / 46	DOMBERG, Tonis	EST	
30 / 62	CUNHA, Bernardo	POR	

17 HUKKANEN, Aleksi
18 TCHELISHVILI, Akaki
19 COPAT, Leonardo — 10 / 00 1:08
20 RAIDMA, Kaspar
21 GROSSIR LEOUSSIS, Dylan
22 RODRIGUEZ NARANJO, Leonel — 10 s1 / 01 2:40
23 DOMBERG, Tonis
24 CUNHA, Bernardo

41 HUKKANEN, Aleksi — 01 s2 / 00 4:27
42 COPAT, Leonardo — 10 / 00 1:49
43 GROSSIR LEOUSSIS, Dylan
44 CUNHA, Bernardo — 00 / 10 1:01

53 COPAT, Leonardo — 00 / 01 s1 7:59
54 GROSSIR LEOUSSIS, Dylan — 10 / 00 0:56

59 COPAT, Leonardo — 10 / 00 s1 2:56 — **Pool C**

POOL D

4 / 36	GRELIER, Mael	FRA	
20 / 52	JOLKIN, Nikita / STOJANOWSKI, Aleksander	EST / GBR	
12 / 44	GENYS, Majus	LTU	
28 / 60	SORIANO MORON, Dario	ESP	
8 / 40	SARBOCH, Vit	CZE	
24 / 56	ANTUNES, Victor	POR	
16 / 48	TRILLO VALEIRO, Miguel	ESP	
32 / 64	ZALAGH, Redouane	FRA	

25 GRELIER, Mael
26 STOJANOWSKI, Aleksander — 00 / 11 s2 3:03
27 GENYS, Majus
28 SORIANO MORON, Dario
29 SARBOCH, Vit
30 ANTUNES, Victor
31 TRILLO VALEIRO, Miguel
32 ZALAGH, Redouane

45 GRELIER, Mael — 10 s2 / 00 s3 5:09
46 SORIANO MORON, Dario — 00 / 10 1:05
47 SARBOCH, Vit — 10 / 00 s1 1:09
48 ZALAGH, Redouane — 00 s3 / 11 s1 3:28

55 SORIANO MORON, Dario — 00 / 10 0:53
56 SARBOCH, Vit — 10 s2 / 00 7:27

60 SARBOCH, Vit — 00 / 10 s1 1:45 — **Pool D**

73 DURBANO, Alessandro Bruno — 01 s1 / 00 s2 4:00

74 COPAT, Leonardo — 10 s2 / 00 s3 4:15

79 DURBANO, Alessandro Bruno — 11 / 00 0:56 — **1.**

1.	DURBANO, Alessandro Bruno	ITA
2.	COPAT, Leonardo	ITA
3.	SARBOCH, Vit	CZE
3.	HUKKANEN, Aleksi	FIN
5.	JAKS, Adam	CZE
5.	COUTINHO, Tiago	POR
7.	GNAFOUA, David	FRA
7.	ZALAGH, Redouane	FRA

[A1]
[A2] ROBIN, Lenny — FRA
[B1] BRABANDER, Tim — NED
[B2] YANKEVYCH NAGORNIY, Bogdan — ESP
[C1] NARKUS, Vygirdas — LTU
[C2] RAIDMA, Kaspar — EST
[D1]
[D2] ANTUNES, Victor — POR

61 ROBIN, Lenny
[A3] DIAS, Afonso
62 YANKEVYCH NAGORNIY, Bogdan — 00 / 10 0:32
[B3] GNAFOUA, David
63 NARKUS, Vygirdas — 10 / 00 s1 3:49
[C3] HUKKANEN, Aleksi
64 ANTUNES, Victor
[D3] ZALAGH, Redouane

65 ROBIN, Lenny — 10 / 00 1:22
[A4] JAKS, Adam
66 GNAFOUA, David — 00 / 10 2:28
[B4] FARNESI, Matteo
67 HUKKANEN, Aleksi — 00 s1 / 01 s2 4:29
[C4] GROSSIR LEOUSSIS, Dylan
68 ZALAGH, Redouane — 00 s2 / 11 s1 2:57
[D4] SORIANO MORON, Dario

69 JAKS, Adam — 00 sH / 10 0:19
70 GNAFOUA, David — 10 s1 / 00 s2 5:03
71 HUKKANEN, Aleksi — 10 s1 / 00 0:50
72 ZALAGH, Redouane — 10 / 00 0:57

75 JAKS, Adam — 10 s2 / 00 s3 9:04
[74] SARBOCH, Vit
76 HUKKANEN, Aleksi — 10 s2 / 00 s2 4:29
[73] COUTINHO, Tiago

77 SARBOCH, Vit — 00 s2 / 10 s2 9:14 — **3.**
78 HUKKANEN, Aleksi — 10 s1 / 00 s2 5:47 — **3.**

ippon.org v3.0 (c) International Judo Federation IJF

Fuengirola Cadet European Cup 2023

Fuengirola (ESP), 18-19 Feb 2023

-90 kg

20 Judoka

POOL A

- 1 / 17 — MINCINESI, Cristiano — ITA
- 9 / 25 — STOROZHUK, Danilo — POR; ROMERO NAKHIL, Carlos Karim — ESP
- 5 / 21 — NWAHA NGON, Avi Kelian — FRA
- 13 / 29 — CUPALOV, Jegor — LTU

POOL B

- 3 / 19 — ALMALKI, Mohammed — KSA
- 11 / 27 — CALDERON LASO, Pablo — ESP
- 7 / 23 — SONNTAG, Gaya — FRA
- 15 / 31 — USIN, Huko Partel — EST; BLACK, Noah — GBR

POOL C

- 2 / 18 — KOTCHE, Daniel — FRA
- 10 / 26 — RAMIREZ PEREZ, Antonio Aixel — ESP; JARDIM, Tiago — POR
- 6 / 22 — VAN BILZEM, Bas — NED
- 14 / 30 — LAVADO RETA, Aritz — ESP

POOL D

- 4 / 20 — KANDELAKI, David — FRA
- 12 / 28 — ORG, Andris — EST; KRZYNOWEK, Oskar — POL
- 8 / 24 — LOZANO PASTOR, Guillem — ESP
- 16 / 32 — SALTONAS, Aldas — LTU

Repechage / Trostrunde

- [A1]
- [A2] STOROZHUK, Danilo — POR
- [B1]
- [B2] BLACK, Noah — GBR
- [C1] JARDIM, Tiago — POR
- [C2] KOTCHE, Daniel — FRA
- [D1]
- [D2] SALTONAS, Aldas — LTU

Match	Red	White	Winner	Time
1	MINCINESI, C. (ITA)		MINCINESI, C. (ITA)	
2	STOROZHUK, D. (POR)		STOROZHUK, D. (POR)	10 / 00 s1 1:04
3	NWAHA NGON, A. (FRA)		NWAHA NGON, A. (FRA)	
4	CUPALOV, Jegor (LTU)		CUPALOV, Jegor (LTU)	
5	ALMALKI, M. (KSA)		ALMALKI, M. (KSA)	
6	CALDERON LASO, P. (ESP)		CALDERON LASO, P. (ESP)	
7	SONNTAG, Gaya (FRA)		SONNTAG, Gaya (FRA)	
8	BLACK, Noah (GBR)		BLACK, Noah (GBR)	00 s1 / 01 4:00
9	KOTCHE, Daniel (FRA)		KOTCHE, Daniel (FRA)	
10	RAMIREZ PEREZ, A. (ESP)		RAMIREZ PEREZ, A. (ESP)	10 / 00 0:21
11	VAN BILZEM, Bas (NED)		VAN BILZEM, Bas (NED)	
12	LAVADO RETA, A. (ESP)		LAVADO RETA, A. (ESP)	
13	KANDELAKI, David (FRA)		KANDELAKI, David (FRA)	
14	ORG, Andris (EST)		ORG, Andris (EST)	10 / 00 0:15
15	LOZANO PASTOR, G. (ESP)		LOZANO PASTOR, G. (ESP)	
16	SALTONAS, Aldas (LTU)		SALTONAS, Aldas (LTU)	
17	MINCINESI, C. (ITA)	STOROZHUK, D. (POR)	MINCINESI, C. (ITA)	10 / 00 1:16
18	NWAHA NGON, A. (FRA)	CUPALOV, Jegor (LTU)	NWAHA NGON, A. (FRA)	10 / 00 0:38
19	CALDERON LASO, P. (ESP)	ALMALKI, M. (KSA)	CALDERON LASO, P. (ESP)	00 s1 / 01 s1 4:00
20	SONNTAG, Gaya (FRA)	BLACK, Noah (GBR)	SONNTAG, Gaya (FRA)	10 / 00 0:43
21	RAMIREZ PEREZ, A. (ESP)	KOTCHE, Daniel (FRA)	RAMIREZ PEREZ, A. (ESP)	00 s1 / 01 4:00
22	VAN BILZEM, Bas (NED)	LAVADO RETA, A. (ESP)	VAN BILZEM, Bas (NED)	01 / 00 s1 4:00
23	KANDELAKI, David (FRA)	ORG, Andris (EST)	KANDELAKI, David (FRA)	10 s1 / 00 s2 2:49
24	LOZANO PASTOR, G. (ESP)	SALTONAS, Aldas (LTU)	LOZANO PASTOR, G. (ESP)	10 / 00 0:40
25	MINCINESI, C. (ITA)	NWAHA NGON, A. (FRA)	MINCINESI, C. (ITA)	10 / 00 s3 2:20
26	SONNTAG, Gaya (FRA)	CALDERON LASO, P. (ESP)	SONNTAG, Gaya (FRA)	00 / 10 0:09
27	RAMIREZ PEREZ, A. (ESP)	VAN BILZEM, Bas (NED)	RAMIREZ PEREZ, A. (ESP)	10 s1 / 00 s1 3:40
28	LOZANO PASTOR, G. (ESP)	LOZANO PASTOR, G. (ESP)	LOZANO PASTOR, G. (ESP)	00 / 01 4:00
29	STOROZHUK, D. (POR)	[A3] NWAHA NGON, A. (FRA)		
30	BLACK, Noah (GBR)	[B3] CALDERON LASO, P. (ESP)		
31	KOTCHE, Daniel (FRA)	[C3] VAN BILZEM, Bas (NED)		00 / 10 1:08
32	SALTONAS, Aldas (LTU)	[D3] KANDELAKI, David (FRA)		
33	NWAHA NGON, A. (FRA)	STOROZHUK, D. (POR)	NWAHA NGON, A. (FRA)	01 / 10 s1 2:09
34	BLACK, Noah (GBR)	CALDERON LASO, P. (ESP)	BLACK, Noah (GBR)	10 / 00 0:21
35	KOTCHE, Daniel (FRA)	VAN BILZEM, Bas (NED)	KOTCHE, Daniel (FRA)	10 / 00 s1 1:38
36	KANDELAKI, David (FRA)	KANDELAKI, David (FRA)	KANDELAKI, David (FRA)	00 s1 / 10 1:02
37	MINCINESI, C. (ITA)		MINCINESI, C. (ITA)	10 / 00 1:46
38	LOZANO PASTOR, G. (ESP)		LOZANO PASTOR, G. (ESP)	00 s1 / 01 s1 4:26
39	NWAHA NGON, A. (FRA)	[38] RAMIREZ PEREZ, A. (ESP)		10 / 00 0:18
40	KOTCHE, Daniel (FRA)	[37] SONNTAG, Gaya (FRA)		10 s1 / 00 s3 2:21
41	RAMIREZ PEREZ, A. (ESP)		RAMIREZ PEREZ, A. (ESP)	00 / 10 2:02
42	SONNTAG, Gaya (FRA)		SONNTAG, Gaya (FRA)	00 / 01 s1 4:00
43	MINCINESI, C. (ITA)		MINCINESI, C. (ITA)	10 / 01 s1 1:44

Pool A - Winner — Vainqueur / Sieger

Pool B - Winner — Vainqueur / Sieger

Pool C - Winner — Vainqueur / Sieger

Pool D - Winner — Vainqueur / Sieger

1. MINCINESI, C. (ITA)

3. RAMIREZ PEREZ, A. (ESP)

3. SONNTAG, Gaya (FRA)

Results

Résultat / Platzierungen

1.	MINCINESI, Cristiano	ITA
2.	LOZANO PASTOR, Guillem	ESP
3.	RAMIREZ PEREZ, Antonio Aixe	ESP
3.	SONNTAG, Gaya	FRA
5.	NWAHA NGON, Avi Kelian	FRA
5.	KOTCHE, Daniel	FRA
7.	BLACK, Noah	GBR
7.	KANDELAKI, David	FRA

ippon.org v3.0 (c) International Judo Federation IJF

Fuengirola Cadet European Cup 2023

Fuengirola (ESP), 18-19 Feb 2023

+90 kg

16 Judoka

POOL A

1	BU KHAMSIN, Mohammed	KSA
9	BOUCHARD, Jean David	CAN
5	MARTIN ROBLEDO, Iker	ESP
13	BACIU, Loan	FRA

1 BOUCHARD, J. (CAN) — 01 / 10 — 0:45

2 MARTIN ROBLEDO, I. (ESP) — 10 s1 / 01 — 2:59

9 MARTIN ROBLEDO, I. (ESP) — 01 / 11 — 0:55

Pool A - Winner
Vainqueur / Sieger

POOL B

3	RUIZ DIAZ, Juan Jose	ESP
11	TURKHUU, Edouard	FRA
7	GUERREIRO, Romeu	POR
15	ROJAS ARENCIBIA, Alejandro Antonio	ESP

3 TURKHUU, Edouard (FRA) — 00 s1 / 10 — 0:47

4 ROJAS ARENCIBIA, A. (ESP) — 01 sH / 10 s1 — 1:59

10 TURKHUU, Edouard (FRA) — 11 / 00 — 1:12

Pool B - Winner
Vainqueur / Sieger

17 TURKHUU, Edouard (FRA) — 00 / 10 s1 — 0:56

POOL C

2	AKIANA MONGO, Matheo	FRA
10	MASAK, Marek-Adrian	EST
6	PAULAUSKAS, Lukas	LTU
14	MARTIN ROBLEDO, Alejandro	ESP

5 AKIANA MONGO, M. (FRA) — 10 / 00 s1 — 2:31

6 PAULAUSKAS, L. (LTU) — 10 / 00 — 0:20

11 AKIANA MONGO, M. (FRA) — 10 / 00 — 1:36

Pool C - Winner
Vainqueur / Sieger

18 AKIANA MONGO, M. (FRA) — 10 / 00 — 1:10

POOL D

4	DA COSTA, Jean Pascal Bi Goly	FRA
12	GRACIA CONCHA, Guillermo	ESP
8	MIMOSO, Ricardo	POR
16	DOMINGUEZ MILAN, Arnau	ESP

7 DA COSTA, J. (FRA) — 11 / 00 s1 — 0:47

8 DOMINGUEZ MILAN, A. (ESP) — 01 s2 / 11 s1 — 1:53

12 DA COSTA, J. (FRA) — 10 / 00 — 0:22

Pool D - Winner
Vainqueur / Sieger

23 AKIANA MONGO, M. (FRA) — 01 / 10 s1 — 2:24

1.

Results

Résultat / Platzierungen

1.	AKIANA MONGO, Matheo	FRA
2.	TURKHUU, Edouard	FRA
3.	DA COSTA, Jean Pascal Bi Goly	FRA
3.	MASAK, Marek-Adrian	EST
5.	ROJAS ARENCIBIA, Alejandro Antonio	ESP
5.	MARTIN ROBLEDO, Iker	ESP
7.	BOUCHARD, Jean David	CAN
7.	GRACIA CONCHA, Guillermo	ESP

Repechage / Trostrunde

[A1]	BACIU, Loan	FRA
[A2]	BOUCHARD, Jean David	CAN
[B1]	RUIZ DIAZ, Juan Jose	ESP
[B2]	ROJAS ARENCIBIA, Alejandro Antonio	ESP
[C1]	MASAK, Marek-Adrian	EST
[C2]	PAULAUSKAS, Lukas	LTU
[D1]	GRACIA CONCHA, Guillermo	ESP
[D2]	DOMINGUEZ MILAN, Arnau	ESP

13 BOUCHARD, J. (CAN) — 00 / 10 — 0:00

14 ROJAS ARENCIBIA, A. (ESP) — 00 / 10 — 1:53

15 MASAK, M. (EST) — 10 / 00 — 1:39

16 GRACIA CONCHA, G. (ESP) — 10 s2 / 00 — 1:18

19 ROJAS ARENCIBIA, A. (ESP) — 00 / 10 — 1:54

[18] DA COSTA, J. (FRA)

20 MASAK, M. (EST) — 10 / 00 — 1:12

[17] MARTIN ROBLEDO, I. (ESP)

21 DA COSTA, J. (FRA) — 00 s3 / 11 — 2:38

3.

22 MASAK, M. (EST) — 11 s1 / 00 — 4:00

3.

ippon.org v3.0 (c) International Judo Federation IJF

Fuengirola Cadet European Cup 2023

Fuengirola (ESP), 18-19 Feb 2023

-40 kg

5 Judoka

			1	3	5	Wins Score	
1	CIAVURRO, Rachele	ITA		0	0	0 / 0	
3	AUREL, Mathilde	FRA	1		1	2 / 0	
5	SERRANO GEMES, Estela	ESP	1	0		1 / 0	

			2	4	Wins	Scores
2	CARINHAS, Beatriz	POR		0		(0)
4	MARTIN CARRICHES, Aiora	ESP	1			(0)

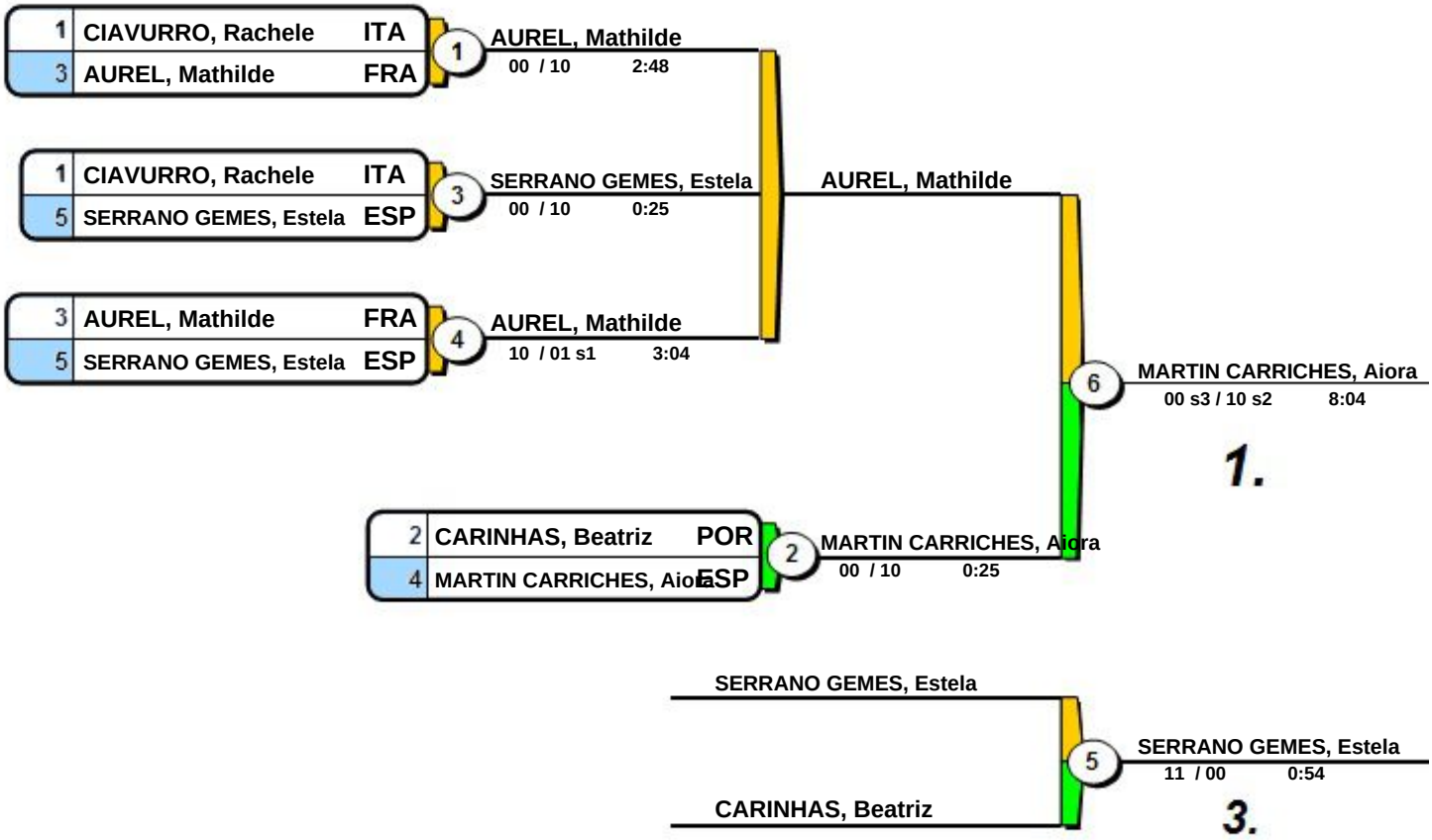

Final Results

1. MARTIN CARRICHES, Aiora ESP
2. AUREL, Mathilde FRA
3. SERRANO GEMES, Estela ESP

ippon.org v3.0 (c) International Judo Federation IJF

Fuengirola Cadet European Cup 2023

Fuengirola (ESP), 18-19 Feb 2023

-44 kg

18 Judoka

POOL A

- 1 / 17 — BEORLEGUI OSES, Marta — ESP
- 9 / 25 — SANCHO, Madalena — POR
- 5 / 21 — REVELLI, Alice — ITA / SANZ NAVARRO, Abril — ESP
- 13 / 29 — RIKMANSPOEL, Maud — NED

POOL B

- 3 / 19 — LAHRIFI, Lalla-Dounia — FRA
- 11 / 27 — EWING, Eva — GBR
- 7 / 23 — LIMA, Imane — FRA
- 15 / 31 — MOLINA OLIVER, Laura — ESP

POOL C

- 2 / 18 — SALVADORI, Sara — ITA
- 10 / 26 — LOPEZ, Alice — FRA / VONDRAKOVA, Lada — CZE
- 6 / 22 — CHURCH, Evie — GBR
- 14 / 30 — GUERRERO FUENTES, Angie — ESP

POOL D

- 4 / 20 — KRIZOVA, Kristina Lili — SVK
- 12 / 28 — GARCIA SANCHEZ, Irene — ESP
- 8 / 24 — PUENTE LOPEZ, Africa — ESP
- 16 / 32 — MORUZZI, Rachele — ITA

Repechage / Trostrunde

- [A1] —
- [A2] SANCHO, Madalena — POR
- [B1] —
- [B2] EWING, Eva — GBR
- [C1] VONDRAKOVA, Lada — CZE
- [C2] SALVADORI, Sara — ITA
- [D1] —
- [D2] KRIZOVA, Kristina Lili — SVK

Match	Winner	Score	Time
1	BEORLEGUI OSES, M. (ESP)		
2	SANCHO, Madalena (POR)		
3	REVELLI, Alice (ITA)	10 / 00	1:09
4	RIKMANSPOEL, M. (NED)		
5	LAHRIFI, L. (FRA)		
6	EWING, Eva (GBR)		
7	LIMA, Imane (FRA)		
8	MOLINA OLIVER, L. (ESP)		
9	SALVADORI, Sara (ITA)		
10	LOPEZ, Alice (FRA)	10 / 00	0:30
11	CHURCH, Evie (GBR)		
12	GUERRERO FUENTES, A. (ESP)		
13	KRIZOVA, K. (SVK)		
14	GARCIA SANCHEZ, I. (ESP)		
15	PUENTE LOPEZ, A. (ESP)		
16	MORUZZI, Rachele (ITA)		
17	BEORLEGUI OSES, M. (ESP)	10 / 00	0:40
18	RIKMANSPOEL, M. (NED)	00 / 10	1:56
19	LAHRIFI, L. (FRA)	10 / 01 s3	2:40
20	LIMA, Imane (FRA)	01 s1 / 00 s1	4:00
21	LOPEZ, Alice (FRA)	00 / 10	0:15
22	GUERRERO FUENTES, A. (ESP)	00 s1 / 10	1:57
23	GARCIA SANCHEZ, I. (ESP)	00 s1 / 10 s1	2:43
24	PUENTE LOPEZ, A. (ESP)	10 / 00 s1	1:28
25	BEORLEGUI OSES, M. (ESP)	10 / 00 s3	2:04
26	LAHRIFI, L. (FRA)	10 s1 / 00 s1	3:50
27	LOPEZ, Alice (FRA)	10 / 00 s1	0:45
28	GARCIA SANCHEZ, I. (ESP)	11 s1 / 01 s1	7:20
29	SANCHO, Madalena (POR)		
30	EWING, Eva (GBR)		
31	VONDRAKOVA, Lada (CZE)	11 / 00	1:05
32	KRIZOVA, K. (SVK)		
33	RIKMANSPOEL, M. (NED)	00 / 11	1:50
34	EWING, Eva (GBR)	10 s1 / 00	1:47
35	VONDRAKOVA, Lada (CZE)	10 / 01	1:20
36	PUENTE LOPEZ, A. (ESP)	00 / 10	0:54
37	BEORLEGUI OSES, M. (ESP)	01 / 00	4:00
38	LOPEZ, Alice (FRA)	10 s1 / 00 s3	2:11
39	RIKMANSPOEL, M. (NED)	10 / 00 s3	3:51
40	PUENTE LOPEZ, A. (ESP)	00 sH / 11	2:28
41	GARCIA SANCHEZ, I. (ESP)	00 s2 / 01	4:00
42	PUENTE LOPEZ, A. (ESP)	01 s2 / 00	4:00
43	BEORLEGUI OSES, M. (ESP)	10 / 00 s3	2:55

Pool A - Winner
Vainqueur / Sieger

Pool B - Winner
Vainqueur / Sieger

Pool C - Winner
Vainqueur / Sieger

Pool D - Winner
Vainqueur / Sieger

1. BEORLEGUI OSES, M. (ESP)

3. [38] GARCIA SANCHEZ, I. (ESP)

3. [37] LAHRIFI, L. (FRA)

Results
Résultat / Platzierungen

1.	BEORLEGUI OSES, Marta	ESP
2.	LOPEZ, Alice	FRA
3.	GARCIA SANCHEZ, Irene	ESP
3.	PUENTE LOPEZ, Africa	ESP
5.	RIKMANSPOEL, Maud	NED
5.	LAHRIFI, Lalla-Dounia	FRA
7.	EWING, Eva	GBR
7.	VONDRAKOVA, Lada	CZE

ippon.org v3.0 (c) International Judo Federation IJF

Fuengirola Cadet European Cup 2023

Fuengirola (ESP), 18-19 Feb 2023

-48 kg

23 Judoka

POOL A

- 1 DIAZ HERNANDEZ, Aitana ESP
- 17
- 9 ALDER, Amelia GBR
- 25 BONZANO, Giulia ITA
- 5 ALMEIDA, Beatriz POR
- 21
- 13 SABAN, Chloe FRA
- 29 LIMON TAMARGO, Andrea ESP

1 DIAZ HERNANDEZ, A. (ESP)

2 BONZANO, Giulia (ITA) — 00 s1 / 10 s1 — 2:41

3 ALMEIDA, Beatriz (POR)

4 LIMON TAMARGO, A. (ESP) — 00 s1 / 10 — 0:32

17 DIAZ HERNANDEZ, A. (ESP) — 01 / 00 — 4:00

18 LIMON TAMARGO, A. (ESP) — 00 s1 / 10 — 1:08

25 DIAZ HERNANDEZ, A. (ESP) — 01 / 00 s2 — 4:00

Pool A - Winner
Vainqueur / Sieger

POOL B

- 3 AYMARD, Tifenn FRA
- 19
- 11 BARRIO PABLO, Clara ESP
- 27 OBERHUBER, Anna ITA
- 7 GAITERO MARTIN, Marta ESP
- 23
- 15 STOFBERG, Lara NED
- 31 LAVRINJOVA, Marija EST

5 AYMARD, Tifenn (FRA)

6 OBERHUBER, Anna (ITA) — 00 / 10 — 0:52

7 GAITERO MARTIN, M. (ESP)

8 STOFBERG, Lara (NED) — 01 / 00 s1 — 4:00

19 AYMARD, Tifenn (FRA) — 10 / 00 — 1:31

20 STOFBERG, Lara (NED) — 00 s2 / 01 s2 — 5:01

26 AYMARD, Tifenn (FRA) — 10 / 00 s3 — 1:51

Pool B - Winner
Vainqueur / Sieger

37 DIAZ HERNANDEZ, A. (ESP) — 11 / 00 — 1:06

POOL C

- 2 BERSELLINI, Alice ITA
- 18
- 10 BERNARDINO, Maria POR
- 26 DYE, Isciane FRA
- 6
- 22 MURILLO MARTINEZ DE LIZARRONDO, Arnate ESP
- 14 CALLAGHAN, Jocelyn GBR
- 30

9 BERSELLINI, A. (ITA)

10 DYE, Isciane (FRA) — 00 / 11 — 1:22

11 MURILLO MARTINEZ DE LIZARRONDO, A. (ESP)

12 CALLAGHAN, J. (GBR)

21 BERSELLINI, A. (ITA) — 10 s2 / 00 s1 — 2:43

22 MURILLO MARTINEZ DE LIZARRONDO, A. (ESP) — 10 s1 / 00 s3 — 3:02

27 BERSELLINI, A. (ITA) — 11 / 00 — 1:49

Pool C - Winner
Vainqueur / Sieger

38 BERSELLINI, A. (ITA) — 10 s2 / 00 sH — 6:22

43 DIAZ HERNANDEZ, A. (ESP) — 10 s1 / 00 s3 — 9:20

1.

POOL D

- 4 CABALLERO, Sarah FRA
- 20
- 12 DELANEY, Ruby GBR
- 28 PLA BELMONTE, Claudia ESP
- 8 MAILLARD, Celia FRA
- 24
- 16 HENRIQUES, Iara POR
- 32 FERNANDEZ-VILLARRENAGA FERNANDEZ, Ines ESP

13 CABALLERO, Sarah (FRA)

14 PLA BELMONTE, C. (ESP) — 00 / 10 — 0:52

15 MAILLARD, Celia (FRA)

16 HENRIQUES, Iara (POR) — 01 s1 / 00 s2 — 4:00

23 PLA BELMONTE, C. (ESP) — 00 / 01 s1 — 4:00

24 MAILLARD, Celia (FRA) — 10 / 00 — 0:30

28 MAILLARD, Celia (FRA) — 00 s2 / 01 — 4:00

Pool D - Winner
Vainqueur / Sieger

Results

Résultat / Platzierungen

1.	DIAZ HERNANDEZ, Aitana	ESP
2.	BERSELLINI, Alice	ITA
3.	MAILLARD, Celia	FRA
3.	AYMARD, Tifenn	FRA
5.	STOFBERG, Lara	NED
5.	PLA BELMONTE, Claudia	ESP
7.	BONZANO, Giulia	ITA
7.	DYE, Isciane	FRA

Repechage / Trostrunde

[A1]
[A2] BONZANO, Giulia ITA
[B1]
[B2] OBERHUBER, Anna ITA
[C1]
[C2] DYE, Isciane FRA
[D1]
[D2] HENRIQUES, Iara POR

29 BONZANO, Giulia (ITA)
[A3] LIMON TAMARGO, A. (ESP)

30 OBERHUBER, Anna (ITA)
[B3] STOFBERG, Lara (NED)

31 DYE, Isciane (FRA)
[C3] MURILLO MARTINEZ DE LIZARRONDO, A. (ESP)

32 HENRIQUES, Iara (POR)
[D3] PLA BELMONTE, C. (ESP)

33 BONZANO, Giulia (ITA) — 10 / 00 — 0:50

34 STOFBERG, Lara (NED) — 00 / 10 — 1:31

35 DYE, Isciane (FRA) — 10 / 00 s1 — 1:08

36 PLA BELMONTE, C. (ESP) — 00 / 01 — 4:00

39 STOFBERG, Lara (NED) — 00 / 10 s1 — 1:42

[38] MAILLARD, Celia (FRA)

40 PLA BELMONTE, C. (ESP) — 00 sH / 10 s2 — 8:42

[37] AYMARD, Tifenn (FRA)

41 MAILLARD, Celia (FRA) — 00 / 10 — 1:01

3.

42 AYMARD, Tifenn (FRA) — 00 / 10 — 0:39

3.

ippon.org v3.0 (c) International Judo Federation IJF

Fuengirola Cadet European Cup 2023

Fuengirola (ESP), 18-19 Feb 2023

-52 kg

34 Judoka

POOL A

1 / 33	TERBISH, Ariunzaya	MGL
17 / 49	MARTINEZ DE RITUERTO MORILLAS, Monica	ESP
9 / 41	SCHROEDER, Anna	EST
25 / 57	BERRIOT, Eilys	FRA
5 / 37	HODSON, Lola	GBR
21 / 53	AGATI-ALOUACHE, Manon	FRA
13 / 45	BLANCO ARMENTEROS, Laura	ESP
29 / 61	SANTOS, Sofia	POR

1 TERBISH, Ariunzaya
2 MARTINEZ DE RITUERTO MORILLAS, Monica
3 SCHROEDER, Anna
4 BERRIOT, Eilys
5 HODSON, Lola
6 AGATI-ALOUACHE, Manon
7 BLANCO ARMENTEROS, Laura
8 SANTOS, Sofia

33 TERBISH, Ariunzaya — 01 / 20 / 00 7:11
34 BERRIOT, Eilys — 00 / 10 0:59
35 AGATI-ALOUACHE, Manon — 00 s2 / 01 s2 4:00
36 SANTOS, Sofia — 00 s1 / 10 3:31

49 TERBISH, Ariunzaya — 10 s1 / 00 s2 4:05
50 AGATI-ALOUACHE, Manon — 10 / 00 2:00

57 TERBISH, Ariunzaya — 01 / 00 s2 4:49
Pool A

POOL B

3 / 35	POULANGE, Alyssia	FRA
19 / 51	ARCONES MONTENEGRO, Maria Del Rocio	ESP
11 / 43	EINIKAITE, Vytaute	LTU
27 / 59	FILIPE, Beatriz	POR
7 / 39	ASEERI, Sara Sattam S	KSA
23 / 55	NAPOLEONE, Ottavia	ITA
15 / 47	MARQUES, Alicia	FRA
31 / 63	TORRES, Catarina	POR
	~~PADILLA VICENTE, Yesenia~~	~~ESP~~

9 POULANGE, Alyssia
10 ARCONES MONTENEGRO, Maria Del Rocio
11 FILIPE, Beatriz
12 ASEERI, Sara Sattam S
13 NAPOLEONE, Ottavia
14 MARQUES, Alicia
15 TORRES, Catarina
16 ~~PADILLA VICENTE, Yesenia~~

37 POULANGE, Alyssia — 11 / 00 2:42
38 FILIPE, Beatriz — 10 / 00 0:08
39 MARQUES, Alicia — 00 / 10 1:47
40 TORRES, Catarina — 10 / 00 0:00

51 POULANGE, Alyssia — 10 / 00 0:53
52 MARQUES, Alicia — 10 / 00 0:12

58 POULANGE, Alyssia — 01 / 00 s1 4:00
Pool B

73 TERBISH, Ariunzaya — 10 s2 / 00 s3 5:00

POOL C

2 / 34	COUDRET, Mathilde	FRA
18 / 50	TRINDADE, Margarida	POR
10 / 42	GIL SAEZ, Maria	ESP
26 / 58	CHISHOLM, Kate	GBR
6 / 38	SCHIPPER, Yael	NED
22 / 54	DUSSAULT, Leanne	CAN
14 / 46	FLEURY, Calypso	FRA
30 / 62	SAEZ HEVIA, Adriana	ESP

17 COUDRET, Mathilde
18 TRINDADE, Margarida
19 GIL SAEZ, Maria
20 CHISHOLM, Kate
21 SCHIPPER, Yael
22 DUSSAULT, Leanne
23 FLEURY, Calypso
24 SAEZ HEVIA, Adriana

41 COUDRET, Mathilde — 10 / 00 0:23
42 GIL SAEZ, Maria — 01 s1 / 00 5:46
43 SCHIPPER, Yael — 01 s1 / 00 s2 4:25
44 SAEZ HEVIA, Adriana — 00 / 10 0:27

53 COUDRET, Mathilde — 10 / 00 3:03
54 SCHIPPER, Yael — 10 s1 / 00 s3 1:51

59 COUDRET, Mathilde — 10 / 00 0:52
Pool C

74 COUDRET, Mathilde — 11 / 01 s3 5:45

TERBISH, Ariunzaya — 10 / 00 sH 1:33 — 79
1.

POOL D

4 / 36	MAROZAITE, Rugile	LTU
20 / 52	CABRAL, Raquel	POR
12 / 44	ROBINSON, Lucy	GBR
28 / 60	RIVERO SUAREZ, Daniela	ESP
8 / 40	COMEYNE, Manon	FRA
24 / 56	PERRA, Arianna Carlotta	ITA
16 / 48	DOUIDI, Lina	FRA
32 / 64	PEREIRA, Mariana	POR
	VIVES PUEYO, Martina	ESP

25 MAROZAITE, Rugile
26 CABRAL, Raquel — 11 / 00 2:35
27 RIVERO SUAREZ, Daniela
28 COMEYNE, Manon
29 PERRA, Arianna Carlotta
30 DOUIDI, Lina
31 PEREIRA, Mariana
32 VIVES PUEYO, Martina

45 CABRAL, Raquel — 01 / 10 2:34
46 COMEYNE, Manon — 00 s1 / 10 s1 5:49
47 DOUIDI, Lina — 00 s1 / 11 0:41
48 PEREIRA, Mariana — 10 / 01 s1 2:53

55 COMEYNE, Manon — 00 / 10 1:24
56 DOUIDI, Lina — 10 / 00 0:51

60 COMEYNE, Manon — 10 / 00 0:46
Pool D

1.	TERBISH, Ariunzaya	MGL
2.	COUDRET, Mathilde	FRA
3.	ARCONES MONTENEGRO, Maria Del Rocio	ESP
3.	POULANGE, Alyssia	FRA
5.	COMEYNE, Manon	FRA
5.	RIVERO SUAREZ, Daniela	ESP
7.	AGATI-ALOUACHE, Manon	FRA
7.	SCHIPPER, Yael	NED

[A1]
[A2] MARTINEZ DE RITUERTO MORILLAS, Monica ESP
[A3] BERRIOT, Eilys
[A4] AGATI-ALOUACHE, Manon

61 MARTINEZ DE RITUERTO MORILLAS, Monica
62 ARCONES MONTENEGRO, Maria Del Rocio

65 MARTINEZ DE RITUERTO MORILLAS, Monica — 11 / 00 3:34
66 ARCONES MONTENEGRO, Maria Del Rocio — 10 / 00 2:20
69 AGATI-ALOUACHE, Manon — 00 s1 / 01 s1 4:14
70 ARCONES MONTENEGRO, Maria Del Rocio — 01 / 00 4:00

75 ARCONES MONTENEGRO, Maria Del Rocio — 00 s1 / 10 s1 4:13
77 ARCONES MONTENEGRO, Maria — 10 / 00 2:30
3.

[B1]
[B2] ARCONES MONTENEGRO, Maria Del Rocio ESP
[B3] FILIPE, Beatriz
[B4] MARQUES, Alicia

[74] COMEYNE, Manon

[C1]
[C2] TRINDADE, Margarida POR
[C3] GIL SAEZ, Maria
[C4] SCHIPPER, Yael

63 TRINDADE, Margarida
64 RIVERO SUAREZ, Daniela

67 TRINDADE, Margarida — 10 / 00 0:25
68 RIVERO SUAREZ, Daniela — 10 / 00 1:13
71 SCHIPPER, Yael — 00 s1 / 10 1:53
72 RIVERO SUAREZ, Daniela — 10 / 00 sH 1:46

76 RIVERO SUAREZ, Daniela — 00 / 01 s1 4:00
78 POULANGE, Alyssia — 00 / 10 0:23
3.

[D1]
[D2] RIVERO SUAREZ, Daniela ESP
[D3] CABRAL, Raquel
[D4] DOUIDI, Lina

[73] POULANGE, Alyssia

ippon.org v3.0 (c) International Judo Federation IJF

Fuengirola Cadet European Cup 2023

Fuengirola (ESP), 18-19 Feb 2023

-57 kg

29 Judoka

POOL A

- 1 SILVEIRA, Maria POR — 17
- 9 LAFAY, Maelys FRA — 25 VAZQUEZ FERNANDEZ, Irene ESP
- 5 SINNEMA, Fleur NED — 21 GEV, Shira ISR
- 13 LYSOGOR CHERKESOVA, Natalia ESP — 29 IDDIR, Feroudja FRA

1 SILVEIRA, Maria (POR)
2 LAFAY, Maelys (FRA) — 10 / 00 0:10
3 SINNEMA, Fleur (NED) — 10 / 00 s2 2:48
4 IDDIR, Feroudja (FRA) — 00 s1 / 01 4:10

17 SILVEIRA, Maria (POR) — 10 / 00 s1 3:22
18 SINNEMA, Fleur (NED) — 10 s1 / 00 4:57

25 SILVEIRA, Maria (POR) — 01 s1 / 00 s1 7:10
Pool A - Winner
Vainqueur / Sieger

POOL B

- 3 MYLLYLA, Riina FIN — 19 MARTIN GIL, Aitana ESP
- 11 CESLAUSKAITE, Deimante LTU — 27 FROSONI, Giorgia ITA
- 7 PILLOT, Emma FRA — 23 ALMEIDA, Diana POR
- 15 PAZOS TRILLO, Lucia ESP — 31 KISSENISKY, Maddy GBR

5 MYLLYLA, Riina (FIN) — 10 / 00 0:16
6 FROSONI, Giorgia (ITA) — 00 / 10 0:34
7 PILLOT, Emma (FRA) — 10 / 00 s1 2:10
8 PAZOS TRILLO, L. (ESP) — 01 / 00 s1 4:00

19 MYLLYLA, Riina (FIN) — 10 / 00 1:23
20 PAZOS TRILLO, L. (ESP) — 00 s3 / 10 1:12

26 MYLLYLA, Riina (FIN) — 10 / 00 0:19
Pool B - Winner
Vainqueur / Sieger

37 SILVEIRA, Maria (POR) — 10 s1 / 00 2:11

POOL C

- 2 LINK, Chloe GBR — 18
- 10 TORRES IBARCENA, Isabel ESP — 26 SKERYTE, Ugne LTU
- 6 NKAYILU, Armynda FRA — 22 SEIKKULA, Pihla-Maria FIN
- 14 SUAREZ GARCIA, Adriana ESP — 30 DIAS, Maria POR

9 LINK, Chloe (GBR)
10 SKERYTE, Ugne (LTU) — 01 s2 / 10 s2 7:00
11 NKAYILU, Armynda (FRA) — 10 / 00 0:31
12 DIAS, Maria (POR) — 00 / 11 0:47

21 LINK, Chloe (GBR) — 10 / 00 1:13
22 DIAS, Maria (POR) — 01 s1 / 11 s2 4:00

27 LINK, Chloe (GBR) — 10 / 00 s1 1:48
Pool C - Winner
Vainqueur / Sieger

38 LINK, Chloe (GBR) — 11 / 00 s1 1:11

POOL D

- 4 RAINE, Kenady GBR — 20
- 12 DES COGNETS-JULIE, Lou FRA — 28 MORALES ROSIQUE, Claudia ESP
- 8 NICOLAS, Ielena FRA — 24 KUCHARZ, Maja POL
- 16 MORALES IMBERNON, Claudia ESP — 32 GAMBARDELLA, Nina ITA

13 RAINE, Kenady (GBR)
14 MORALES ROSIQUE, C. (ESP) — 00 / 10 0:32
15 NICOLAS, Ielena (FRA) — 10 / 00 s1 2:08
16 GAMBARDELLA, N. (ITA) — 00 s1 / 10 2:26

23 RAINE, Kenady (GBR) — 10 s1 / 00 3:51
24 NICOLAS, Ielena (FRA) — 10 / 00 1:40

28 NICOLAS, Ielena (FRA) — 00 sH / 10 1:22
Pool D - Winner
Vainqueur / Sieger

43 SILVEIRA, Maria (POR) — 10 s1 / 01 s1 3:29
1.

Repechage / Trostrunde

[A1]
[A2] LAFAY, Maelys FRA
[B1] MARTIN GIL, Aitana ESP
[B2] FROSONI, Giorgia ITA
[C1]
[C2] SKERYTE, Ugne LTU
[D1] KUCHARZ, Maja POL
[D2] GAMBARDELLA, Nina ITA

29 LAFAY, Maelys (FRA) — [A3] SINNEMA, Fleur (NED)
30 FROSONI, Giorgia (ITA) — 00 / 10 0:32 — [B3] PAZOS TRILLO, L. (ESP)
31 SKERYTE, Ugne (LTU) — [C3] DIAS, Maria (POR)
32 GAMBARDELLA, N. (ITA) — 00 s3 / 10 2:19 — [D3] RAINE, Kenady (GBR)

33 SINNEMA, Fleur (NED) — 00 / 01 s1 5:09
34 PAZOS TRILLO, L. (ESP) — 00 / 10 0:52
35 SKERYTE, Ugne (LTU) — 10 s1 / 01 s2 4:54
36 GAMBARDELLA, N. (ITA) — 11 / 01 s1 3:41

39 SINNEMA, Fleur (NED) — 10 s2 / 00 s1 3:47
40 SKERYTE, Ugne (LTU) — 11 s1 / 01 4:54

41 NICOLAS, Ielena (FRA) — 00 / 10 0:09 — [38] NICOLAS, Ielena (FRA)
3.

42 SKERYTE, Ugne (LTU) — 10 / 00 0:00 — [37] MYLLYLA, Riina (FIN)
3.

Results

Résultat / Platzierungen

1.	SILVEIRA, Maria	POR
2.	LINK, Chloe	GBR
3.	NICOLAS, Ielena	FRA
3.	SKERYTE, Ugne	LTU
5.	SINNEMA, Fleur	NED
5.	MYLLYLA, Riina	FIN
7.	PAZOS TRILLO, Lucia	ESP
7.	GAMBARDELLA, Nina	ITA

ippon.org v3.0 (c) International Judo Federation IJF

Fuengirola Cadet European Cup 2023

Fuengirola (ESP), 18-19 Feb 2023

-63 kg

34 Judoka

POOL A

1 / 33	SIMUNKOVA, Adela	CZE	
17 / 49	LIPPUS, Henrietta	EST	
9 / 41	WINDLE, Lucy	GBR	
25 / 57	BOJ CHAVEZ, Tamara	ESP	
5 / 37	CHIPAN, Jaelynn	FRA	
21 / 53	YERMIAHU, Mai	ISR	
13 / 45	OBOJES, Laura	ITA	
29 / 61	RODRIGUEZ GONZALEZ, Nira Maria	ESP	

1 SIMUNKOVA, Adela
2 LIPPUS, Henrietta
3 WINDLE, Lucy
4 BOJ CHAVEZ, Tamara
5 CHIPAN, Jaelynn
6 YERMIAHU, Mai
7 OBOJES, Laura
8 RODRIGUEZ GONZALEZ, Nira Maria

33 SIMUNKOVA, Adela — 10 / 00 1:25
34 BOJ CHAVEZ, Tamara — 00 / 11 1:27
35 CHIPAN, Jaelynn — 10 s1 / 00 s2 3:08
36 RODRIGUEZ GONZALEZ, Nira Maria — 00 / 10 0:15

49 SIMUNKOVA, Adela — 10 / 00 0:19
50 CHIPAN, Jaelynn — 10 / 00 s1 2:17

57 SIMUNKOVA, Adela — 10 / 00 0:28 — **Pool A**

POOL B

3 / 35	MARTINEZ DE RITUERTO MORILLAS, Beatriz	ESP	
19 / 51	VAN DER MAAS, Kim	NED	
	JEAN, Chloe	FRA	
11 / 43	RADOSAVOVIC, Kristina	MNE	
27 / 59	VAZQUEZ SEIJAS, Uxia	ESP	
7 / 39	MCMILLAN, Sophie	GBR	
23 / 55	DE PARMA LEON, Luca	ESP	
15 / 47	COSTA, Leonor	POR	
31 / 63	POATY, Beyhane	FRA	

10 JEAN, Chloe — 00 / 10 2:11
11 RADOSAVOVIC, Kristina
12 VAZQUEZ SEIJAS, Uxia
13 MCMILLAN, Sophie
14 DE PARMA LEON, Luca
15 COSTA, Leonor
16 POATY, Beyhane

37 MARTINEZ DE RITUERTO MORILLAS, Beatriz — 00 / 10 1:16
38 RADOSAVOVIC, Kristina — 10 / 00 0:25
39 MCMILLAN, Sophie — 01 / 00 s1 4:00
40 POATY, Beyhane — 00 / 10 0:59

51 JEAN, Chloe — 10 / 00 s2 2:04
52 POATY, Beyhane — 00 / 10 0:41

58 JEAN, Chloe — 10 / 01 1:43 — **Pool B**

73 JEAN, Chloe — 01 / 10 2:37

POOL C

2 / 34	KUCHAR, Varvara	LTU	
18 / 50	PINA, Carlota	POR	
10 / 42	PALAGI, Valentina	ITA	
26 / 58	VILLAMEDIANA JUNCAL, Leyre	ESP	
6 / 38	KHURELCHULUUN, Maralmaa	MGL	
22 / 54	HREBENYK SAVCHAK, Olena Suzanna	ESP	
14 / 46	ANTON, Roberta	GBR	
30 / 62	ASTIER, Ema	FRA	

17 KUCHAR, Varvara
18 PINA, Carlota
19 PALAGI, Valentina
20 VILLAMEDIANA JUNCAL, Leyre
21 KHURELCHULUUN, Maralmaa
22 HREBENYK SAVCHAK, Olena Suzanna
23 ANTON, Roberta
24 ASTIER, Ema

41 KUCHAR, Varvara — 10 / 00 s3 1:32
42 PALAGI, Valentina — 01 s1 / 00 4:00
43 KHURELCHULUUN, Maralmaa — 10 s1 / 00 s3 6:14
44 ASTIER, Ema — 00 / 11 0:30

53 KUCHAR, Varvara — 10 / 00 s1 0:42
54 ASTIER, Ema — 00 s1 / 10 0:27

59 KUCHAR, Varvara — 10 s1 / 00 2:31 — **Pool C**

74 CARPIO FERNANDEZ, Lucia — 00 / 10 2:35

POOL D

4 / 36	GLUBIAK, Magda	POL	
20 / 52	NARVA, Ada-Alexia	FIN	
	ESCASO HURTADO, Visitacion	ESP	
12 / 44	CARPIO FERNANDEZ, Lucia	ESP	
28 / 60	AUBERT GOMEZ, Maya	GBR	
8 / 40	SANZANA, Dakota	CAN	
24 / 56	JOTA, Matilde	POR	
16 / 48	~~NAVAL MARQUES, Sandra~~	~~ESP~~	
32 / 64	GIRARD - - POMBIEILH, Margot	FRA	

25 GLUBIAK, Magda
26 ESCASO HURTADO, Visitacion — 00 s1 / 10 s1 2:38
27 CARPIO FERNANDEZ, Lucia
28 AUBERT GOMEZ, Maya
29 SANZANA, Dakota
30 JOTA, Matilde
31 ~~NAVAL MARQUES, Sandra~~
32 GIRARD - - POMBIEILH, Margot

45 GLUBIAK, Magda — 01 s1 / 00 s1 6:46
46 CARPIO FERNANDEZ, Lucia — 10 / 00 1:05
47 SANZANA, Dakota — 01 s2 / 00 s2 4:00
48 GIRARD - - POMBIEILH, Margot — 10 / 10 0:00

55 CARPIO FERNANDEZ, Lucia — 00 / 10 0:44
56 SANZANA, Dakota — 01 s2 / 00 s2 4:05

60 CARPIO FERNANDEZ, Lucia — 10 / 00 1:13 — **Pool D**

79 CARPIO FERNANDEZ, Lucia — 00 / 10 1:43 — **1.**

1.	CARPIO FERNANDEZ, Lucia	ESP
2.	JEAN, Chloe	FRA
3.	CHIPAN, Jaelynn	FRA
3.	ASTIER, Ema	FRA
5.	KUCHAR, Varvara	LTU
5.	SIMUNKOVA, Adela	CZE
7.	POATY, Beyhane	FRA
7.	AUBERT GOMEZ, Maya	GBR

Repechage

[A1] LIPPUS, Henrietta
[A2] LIPPUS, Henrietta EST
[B1] VAN DER MAAS, Kim NED
[B2] MARTINEZ DE RITUERTO MORILLAS, Beatriz ESP
[C1]
[C2] PINA, Carlota POR
[D1]
[D2] AUBERT GOMEZ, Maya GBR

61 LIPPUS, Henrietta
[A3] BOJ CHAVEZ, Tamara
62 VAN DER MAAS, Kim — 10 / 00 1:48
[B3] RADOSAVOVIC, Kristina
63 PINA, Carlota
[C3] PALAGI, Valentina
64 AUBERT GOMEZ, Maya
[D3] GLUBIAK, Magda

65 LIPPUS, Henrietta — 10 s1 / 01 3:13
[A4] CHIPAN, Jaelynn
66 VAN DER MAAS, Kim — 11 s1 / 00 3:49
[B4] POATY, Beyhane
67 PALAGI, Valentina — 00 s2 / 01 s1 4:00
[C4] ASTIER, Ema
68 AUBERT GOMEZ, Maya — 11 / 00 3:54
[D4] SANZANA, Dakota

69 CHIPAN, Jaelynn — 01 / 11 3:36
70 POATY, Beyhane — 00 / 10 1:55
71 ASTIER, Ema — 00 / 10 2:47
72 AUBERT GOMEZ, Maya — 10 s1 / 00 sH 1:47

75 CHIPAN, Jaelynn — 10 s2 / 00 2:21
[74] KUCHAR, Varvara
76 ASTIER, Ema — 10 / 00 s2 2:36
[73] SIMUNKOVA, Adela

77 CHIPAN, Jaelynn — 10 / 00 s3 5:25 — **3.**
78 ASTIER, Ema — 01 s2 / 00 4:00 — **3.**

ippon.org v3.0 (c) International Judo Federation IJF

Fuengirola Cadet European Cup 2023

Fuengirola (ESP), 18-19 Feb 2023

-70 kg

22 Judoka

POOL A

- 1 HOJDAROVA, Stepanka CZE
- 17
- 9
- 25 DAMOC, Denisa Francesca ITA
- 5 NLEMBE, Lou Cecile FRA
- 21
- 13 JACOBS, Kiki NED
- 29 AYENSA GARCIA, Maria Pilar ESP

1 HOJDAROVA, S. (CZE)
2 DAMOC, D. (ITA)
3 NLEMBE, L. (FRA)
4 JACOBS, Kiki (NED) — 10 s1 / 00 s3 3:07

17 HOJDAROVA, S. (CZE) — 10 / 00 0:07
18 NLEMBE, L. (FRA) — 11 / 00 0:50

25 NLEMBE, L. (FRA) — 00 / 11 1:38
Pool A - Winner
Vainqueur / Sieger

POOL B

- 3 MUTEBA, Nina FRA
- 19
- 11 STALIONYTE, Paulina LTU
- 27 QUEIROS, Ana POR
- 7 MENGIA, Aurora ITA
- 23
- 15 CLOTEAUX, Manon FRA
- 31 CALDERON LUNA, Mar ESP

5 MUTEBA, Nina (FRA)
6 STALIONYTE, P. (LTU) — 10 s1 / 01 3:48
7 MENGIA, Aurora (ITA)
8 CALDERON LUNA, M. (ESP) — 00 s1 / 01 s2 4:00

19 MUTEBA, Nina (FRA) — 10 / 00 0:15
20 MENGIA, Aurora (ITA) — 01 / 00 s1 4:00

26 MUTEBA, Nina (FRA) — 10 s1 / 00 s1 1:53
Pool B - Winner
Vainqueur / Sieger

37 MUTEBA, Nina (FRA) — 00 s3 / 10 s1 3:48

POOL C

- 2 MARCZAK, Julia GBR
- 18
- 10
- 26 DIAS, Patricia POR
- 6 PEREZ MUR, Candela ESP
- 22
- 14 RULLIER, Lucie FRA
- 30 NOVIKOVAITE, Saule LTU

9 MARCZAK, Julia (GBR)
10 DIAS, Patricia (POR)
11 PEREZ MUR, C. (ESP)
12 RULLIER, Lucie (FRA) — 11 / 00 1:14

21 MARCZAK, Julia (GBR) — 10 / 00 0:32
22 RULLIER, Lucie (FRA) — 00 s3 / 10 s1 4:28

27 MARCZAK, Julia (GBR) — 10 / 00 s1 2:03
Pool C - Winner
Vainqueur / Sieger

38 MARCZAK, Julia (GBR) — 10 s2 / 01 s1 5:18

POOL D

- 4 NAVICKAITE, Marta LTU
- 20
- 12 TRONGONE, Francesca ITA
- 28 SACKO, Nene FRA
- 8 VAN LIJF, Xanne NED
- 24
- 16 LETON ESCUDERO, Karla ESP
- 32 ROSA, Beatriz POR

13 NAVICKAITE, M. (LTU)
14 SACKO, Nene (FRA) — 00 s1 / 01 s1 4:00
15 VAN LIJF, Xanne (NED)
16 ROSA, Beatriz (POR) — 00 / 10 0:50

23 NAVICKAITE, M. (LTU) — 01 / 00 s2 4:00
24 VAN LIJF, Xanne (NED) — 11 / 00 1:18

28 VAN LIJF, Xanne (NED) — 00 s3 / 10 s1 4:11
Pool D - Winner
Vainqueur / Sieger

43 MUTEBA, Nina (FRA) — 10 / 00 0:31
1.

Results

Résultat / Platzierungen

1.	MUTEBA, Nina	FRA
2.	MARCZAK, Julia	GBR
3.	MENGIA, Aurora	ITA
3.	NLEMBE, Lou Cecile	FRA
5.	VAN LIJF, Xanne	NED
5.	DIAS, Patricia	POR
7.	JACOBS, Kiki	NED
7.	ROSA, Beatriz	POR

Repechage / Trostrunde

[A1]
[A2] JACOBS, Kiki NED
[B1]
[B2] STALIONYTE, Paulina LTU
[C1]
[C2] DIAS, Patricia POR
[D1]
[D2] ROSA, Beatriz POR

29 JACOBS, Kiki (NED) — [A3] HOJDAROVA, S. (CZE)
30 STALIONYTE, P. (LTU) — [B3] MENGIA, Aurora (ITA)
31 DIAS, Patricia (POR) — [C3] RULLIER, Lucie (FRA)
32 ROSA, Beatriz (POR) — [D3] NAVICKAITE, M. (LTU)

33 JACOBS, Kiki (NED) — 10 / 00 0:54
34 MENGIA, Aurora (ITA) — 00 / 10 0:29
35 DIAS, Patricia (POR) — 10 / 00 s3 1:56
36 ROSA, Beatriz (POR) — 10 / 00 0:00

39 MENGIA, Aurora (ITA) — 00 / 10 s1 4:16
[38] VAN LIJF, Xanne (NED)
40 DIAS, Patricia (POR) — 10 / 00 0:00
[37] NLEMBE, L. (FRA)

41 MENGIA, Aurora (ITA) — 10 s1 / 00 s3 4:30
3.

42 NLEMBE, L. (FRA) — 00 / 10 0:11
3.

ippon.org v3.0 (c) International Judo Federation IJF

Fuengirola Cadet European Cup 2023

Fuengirola (ESP), 18-19 Feb 2023

+70 kg

14 Judoka

POOL A

1	MINKADA-CAQUINEAU, Leonie	FRA
9		
5	GOYTIA CHAJTUR, Ariadna Alejandra	ESP
13	POGOSYAN, Gayane	EST

1 MINKADA-CAQUINEAU, L. (FRA)

2 POGOSYAN, Gayane (EST) — 00 s1 / 10 — 1:19

9 MINKADA-CAQUINEAU, L. (FRA) — 11 / 00 s1 — 2:17

Pool A - Winner
Vainqueur / Sieger

POOL B

3	KOSNAROVA, Marie	CZE
11	MARIN, Alejandra Beatriz	ESP
7	TCHUMAMO, Emeraude	FRA
15	HANHELA, Laura	FIN

3 KOSNAROVA, Marie (CZE) — 10 / 00 s2 — 2:16

4 HANHELA, Laura (FIN) — 00 s1 / 10 — 1:11

10 KOSNAROVA, Marie (CZE) — 11 / 00 s1 — 2:01

Pool B - Winner
Vainqueur / Sieger

17 MINKADA-CAQUINEAU, L. (FRA) — 10 / 00 — 1:02

POOL C

2	SALA CANO, Aitana	ESP
10		
6	AFRIT, Rose	FRA
14	MANE, Rosa	POR

5 SALA CANO, A. (ESP)

6 MANE, Rosa (POR) — 00 / 01 s1 — 4:00

11 MANE, Rosa (POR) — 00 / 10 s1 — 3:32

Pool C - Winner
Vainqueur / Sieger

18 DIANKOLELA-BINIAKOUNOU, Q. — 00 s1 / 10 — 2:05

19 MINKADA-CAQUINEAU, L. (FRA) — 10 / 00 — 1:49

1.

POOL D

4	AKTAS, Emma-Melis	EST
12	CHINI, Chiara	FRA
8	DIANKOLELA-BINIAKOUNOU, Quessia	FRA
16	KASZPEROVA, Kristyna	CZE

7 AKTAS, E. (EST) — 11 / 00 s2 — 3:42

8 DIANKOLELA-BINIAKOUNOU, Q. (FRA) — 10 / 00 s1 — 3:26

12 DIANKOLELA-BINIAKOUNOU, Q. (FRA) — 00 s1 / 10 — 6:01

Pool D - Winner
Vainqueur / Sieger

Results
Résultat / Platzierungen

1.	MINKADA-CAQUINEAU, Leonie	FRA
2.	DIANKOLELA-BINIAKOUNOU, Quessia	FRA
3.	MANE, Rosa	POR
3.	KOSNAROVA, Marie	CZE
5.	HANHELA, Laura	FIN
5.	AKTAS, Emma-Melis	EST
7.	POGOSYAN, Gayane	EST
7.	SALA CANO, Aitana	ESP

Repechage / Trostrunde

[A1]
[A2] POGOSYAN, Gayane EST

13 POGOSYAN, Gayane (EST)

[B1] MARIN, Alejandra Beatriz ESP
[B2] HANHELA, Laura FIN

14 HANHELA, Laura (FIN) — 00 / 10 — 0:52

19 HANHELA, Laura (FIN) — 00 / 10 s2 — 2:48

[18] MANE, Rosa (POR)

21 MANE, Rosa (POR) — 00 / 10 s1 — 0:58

3.

[C1] AFRIT, Rose FRA
[C2] SALA CANO, Aitana ESP

15 SALA CANO, A. (ESP) — 00 s1 / 10 — 2:35

[D1] KASZPEROVA, Kristyna CZE
[D2] AKTAS, Emma-Melis EST

16 AKTAS, E. (EST) — 00 s2 / 10 s1 — 2:58

20 AKTAS, E. (EST) — 00 s2 / 11 — 2:49

[17] KOSNAROVA, Marie (CZE)

22 KOSNAROVA, Marie (CZE) — 00 s1 / 01 s1 — 4:49

3.

ippon.org v3.0 (c) International Judo Federation IJF